ООО «ТИ-СИСТЕМС» ИНЖИНИРИНГ И ПОСТАВКА ТЕХНОЛОГИЧЕСКОГО ОБОРУДОВАНИЯ
Интернет: www.tisys.ru www.tisys.kz www.tisys.by www.ти-системс.рф
Телефоны: +7 (495) 777-47-88, (925) 130-87-87, (925) 500-71-55, 54, 65
Эл. почта: info@tisys.ru info@tisys.kz info@tisys.by

VALVES AND FITTINGS MANUFACTURER
YOUR EXPERT FACTORY IN CHINA

JUDBERD MACHINERY
WWW.JUDBERD.COM

JUDBERD MACHINERY

QINGDAO JUDBERD MACHINERY CO LTD

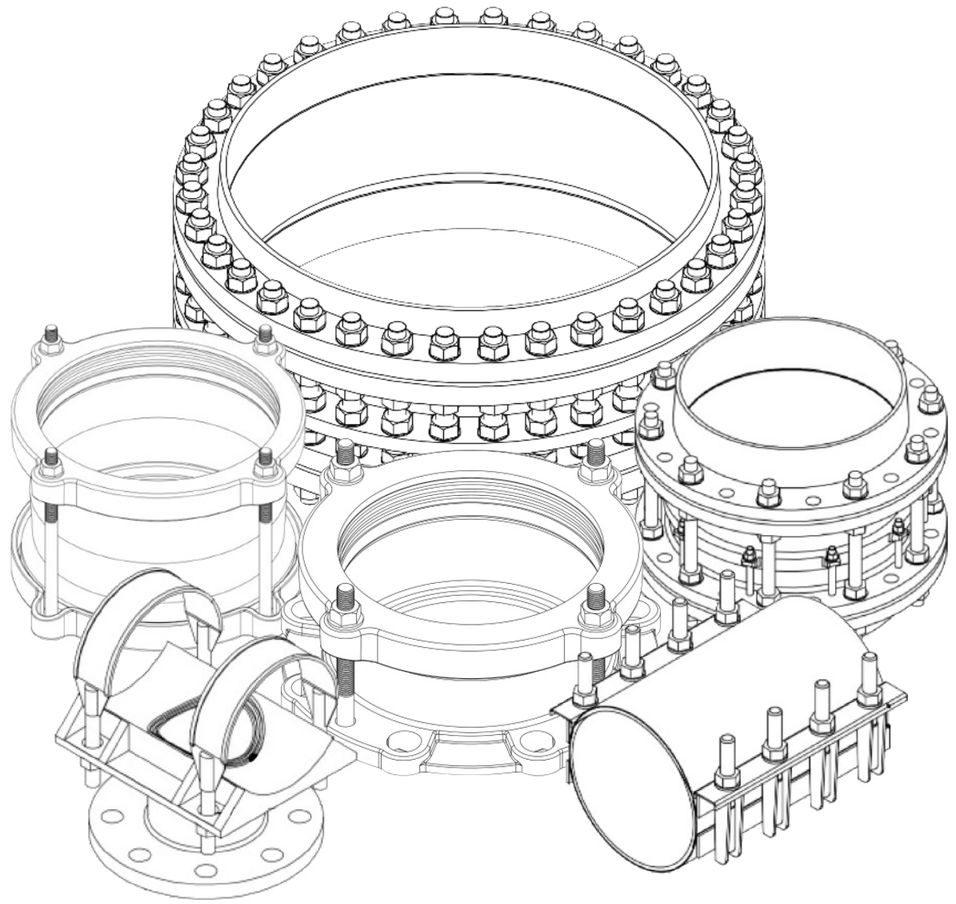

ООО «ТИ-СИСТЕМС» ИНЖИНИРИНГ И ПОСТАВКА ТЕХНОЛОГИЧЕСКОГО ОБОРУДОВАНИЯ
Интернет: www.tisys.ru www.tisys.kz www.tisys.by www.ти-системс.рф
Телефоны: +7 (495) 777-47-88, (925) 130-87-87, (925) 500-71-55, 54, 65
Эл. почта: info@tisys.ru info@tisys.kz info@tisys.by

VALVES AND FITTINGS MANUFACTURER
YOUR EXPERT FACTORY IN CHINA

ООО «ТИ-СИСТЕМС» ИНЖИНИРИНГ И ПОСТАВКА ТЕХНОЛОГИЧЕСКОГО ОБОРУДОВАНИЯ
Интернет: www.tisys.ru www.tisys.kz www.tisys.by www.ти-системс.рф
Телефоны: +7 (495) 777-47-88, (925) 130-87-87, (925) 500-71-55, 54, 65
Эл. почта: info@tisys.ru info@tisys.kz info@tisys.by



COMPANY PROFILE

QINGDAO JUDBERD MACHINERY CO.,LTD

200+
Total Staff

15+
Administrative Staff

20+
Technical Personnel

20+
College Degree workers

Judberd ductile iron pipe joint(dismantling joint,coupling,flange adaptor,quick flange adaptor,saddle,restrained flange adaptor,repair clamp etc) are manufactured using advanced equipment in a outstanding quality level using the finest materials available.

Designed by a first class team of ductile iron pipe fittings specialists with over 20 years experience in the water industry.

Manufacturing facilities are certified to ISO9001-2000 and are company owned and operated.

PRIMARY MATERIALS

DUCTILE IRON

Ductile iron pipe joints are manufactured from ductile iron conforming to

- ASTM A536 GR.65-45-12
- BS EN 1563 ENGJS500-7
- DIN GGG40/50

for greater strength and improved resistance to internal pressures.

Gasket/Resilient seat EPDM according to EN683 ,WRAS approved is also available

Coating first class epoxy powder,WRAS approved powder is also available.

TIE RODS

Galvanized/dacromet/hot dip galvanization carbon steel grade 4.8/6.8/8.8

- STAINLESS STEEL AISI 304
- STAINLESS STEEL AISI 316
- TEFLON COATED STAINLESS STEEL

Installation and operation flanges conform fully to ANSIB16.1 Class 125/ANSI B16.2 Class250 or EN1092-2 PN10/PN16/PN25,Mechanical joint ends conform to AWWA C111/ANSI A21.11

Other flange types are available for specific market requirement.



WE ARE HONORED TO BE CERTIFIED BY WRAS,DVGW,NSF,CE ETC,AND WE OFFER OUTSTANDING QUALITY PRODUCTS WHICH IS GUARANTEED BY AUTO PRODUCTION LINE ,PROFESSIONAL AND EXPERIENCED WORKERS,ISO9001 CERTIFIED QUALITY CONTROL SYSTEM AND STRICTLY MANAGEMENT SYSTEM.

WE INVITE YOU TO GET TO KNOW US BETTER.AND WELCOME YOU COME TO VISIT US.

ООО «ТИ-СИСТЕМС» ИНЖИНИРИНГ И ПОСТАВКА ТЕХНОЛОГИЧЕСКОГО ОБОРУДОВАНИЯ
Интернет: www.tisys.ru www.tisys.kz www.tisys.by www.ти-системс.рф
Телефоны: +7 (495) 777-47-88, (925) 130-87-87, (925) 500-71-55, 54, 65
Эл. почта: info@tisys.ru info@tisys.kz info@tisys.by

PRODUCTION PROCESS



01 CHECK COMPOSITION

Check the chemical composition of the iron with a pre-furnace analyser.



02 ADDING METAL TO CONTROL QUALITY

Adjust metal content in iron water by adding metal until the metal content is qualified.



03 REINFORCEMENT PROCESSING

Machine test bars to standard sizes for tensile strength and elongation testing.

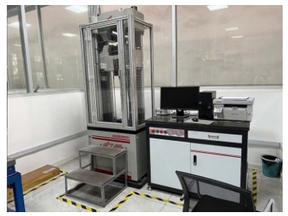

04 TENSILE TEST

Use instrument to tensile test bars to test tensile strength and elongation.



05 SAMPLE POLISHING

Polishing samples for spectroscopy with a spectroscopy grinder.

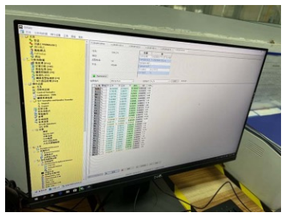

06 CHEMICAL COMPOSITION TESTING

Chemical composition testing by spectrometer, 2 tests are required to ensure accuracy.



12 MACHINING

The dismantling joint are machined according to customer requirements. Judberd produces dismantling joint with 100% machined surfaces, except for the middle gland, so that the surface of the product is very smooth.



11 POLISHING AND SHOT BLASTING

We need to grind the dismantling joint body surface to remove excess parts, so that the casting meets the dimensional requirements of the product. And the surface becomes smooth.

The casting needs to be shot blasted before machining to remove dust and impurities from the surface.



10 CASTING INSPECTION

After casting , we need to check the casting to see if any casting defects are exist.For those with casting defects, the engineer will judge whether the casting should be discarded or can be repaired.



09 CASTING

For large quantities of products, we now use vertical molding lines to produce castings which is very efficient and low cost.

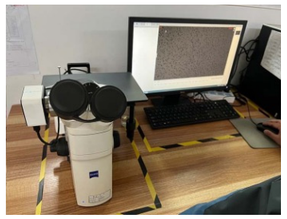

08 METALLOGRAPHIC TESTING

Metallographic testing to compare test results with standards to determine compliance.



07 SAMPLE POLISHING

Polishing of samples for metallographic testing using a metallographic specimen grinding and polishing machine.



13 DIMENSION INSPECTION

After machining, dimension inspection is necessary to assure every dimension is right.



14 2ND SAND BLASTING AND FBE COATING

Shot blasting again to remove rust from the surface of the casting, dust and poor adhesion of the surface due to grinding etc, in preparation for FBE coating

Make FBE coating, nylon coating or other customer-specific coatings for dismantling joint surface.



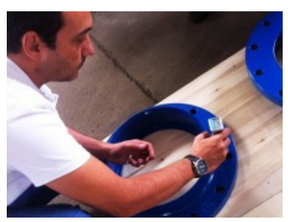

15 FBE COATING INSPECTION

FBE coating inspection include coating appearance inspection, color difference inspection,thickness inspection,powder adhesion,coating performance etc inspection.



16 ASSEMBLING AND PRESSURE VISUAL ETC INSPECTION

Assemble gasket ,bolt and nuts.
Test pressure should be 1.5 times of the working pressure with a holding time of 30s.

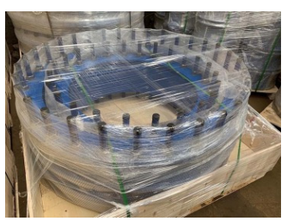

17 PACKING

There many different packing way,we can use polywood box,crate,or metal case etc to pack dismantling joint.

ООО «ТИ-СИСТЕМС» ИНЖИНИРИНГ И ПОСТАВКА ТЕХНОЛОГИЧЕСКОГО ОБОРУДОВАНИЯ
Интернет: www.tisys.ru www.tisys.kz www.tisys.by www.ти-системс.рф
Телефоны: +7 (495) 777-47-88, (925) 130-87-87, (925) 500-71-55, 54, 65
Эл. почта: info@tisys.ru info@tisys.kz info@tisys.by

PRODUCT INTRODUCTION

WWW.JUDBERD.COM

RIGID TYPE DISMANTLING JOINT AS/BS TABLE D/E

SPECIFICATIONS

Dismantling joint standard:
comply with AS/NZS2280

Flange type:
AS2129 Table D/E &BS10 Table D/E



Working pressure and Temperature:
Size DN50 to DN1200,
Working pressure PN16
Temperature from -10℃ to 120℃ for EPDM gasket
Temperature from -10℃ to 82℃ for NBR gasket

MATERIAL SPECIFICATION

SR.NO.	NAME	MATERIAL
1	Long body	Ductile Iron
2	Short body	Ductile Iron
3	Retainer	Ductile Iron
4	Gasket	EPDM/NBR
5	Tie rods	CS/SS

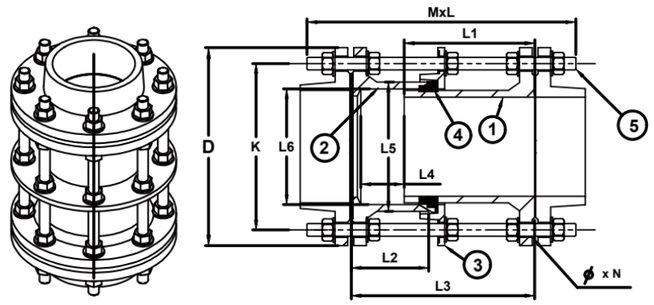

DIMENSIONS(MM)

SIZE	D	K	L3	L4	MXL-N	
					TABLE D	TABLE E
DN80	185	146	205	+/-25	M16x340-4	M16x340-4
DN100	215	178	205	+/-25	M16x340-4	M16x340-8
DN150	280	235	205	+/-25	M16x340-8	M20x340-8
DN200	335	292	215	+/-25	M16x350-8	M20x350-8
DN250	405	356	220	+/-25	M20x380-8	M20x380-12
DN300	455	406	240	+/-25	M20x400-12	M24x400-12
DN350	525	470	240	+/-25	M24x410-12	M24x410-12
DN400	580	521	250	+/-25	M24x430-12	M24x430-12
DN450	640	584	265	+/-25	M24x450-12	M24x450-16
DN500	705	641	275	+/-25	M24x460-16	M24x460-16
DN600	825	756	295	+/-25	M27x500-16	M30x500-16
DN700	910	845	300	+/-25	M27x500-20	M30x500-20
DN800	1060	984	320	+/-25	M33x530-20	M33x530-20
DN900	1175	1092	320	+/-25	M33x530-24	M33x530-24
DN1000	1255	1175	330	+/-25	M36x570-24	M36x570-24
DN1200	1490	1410	350	+/-25	M33x620-32	M36x620-32

Please note dimension may vary at our discretion.

ООО «ТИ-СИСТЕМС» ИНЖИНИРИНГ И ПОСТАВКА ТЕХНОЛОГИЧЕСКОГО ОБОРУДОВАНИЯ
Интернет: www.tisys.ru www.tisys.kz www.tisys.by www.ти-системс.рф
Телефоны: +7 (495) 777-47-88, (925) 130-87-87, (925) 500-71-55, 54, 65
Эл. почта: info@tisys.ru info@tisys.kz info@tisys.by

RIGID TYPE DISMANTLING JOINT PN10/PN16

SPECIFICATIONS

Dismantling joint standard:
comply with EN545

Flange type:
EN1092-2 PN10/PN16

Working pressure and Temperature:
Size DN50 to DN2000,
Working pressure PN10/PN16
Temperature from -10℃ to
120℃ for EPDM gasket
Temperature from -10℃ to
82℃ for NBR gasket



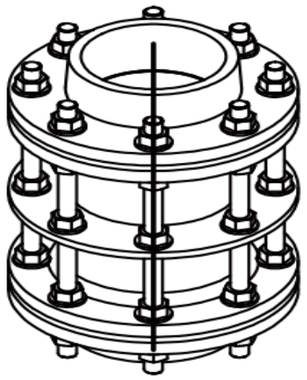

MATERIAL SPECIFICATION

SR.NO.	NAME	MATERIAL
1	Long body	Ductile Iron
2	Short body	Ductile Iron
3	Retainer	Ductile Iron
4	Gasket	EPDM/NBR
5	Tie rods	CS/SS

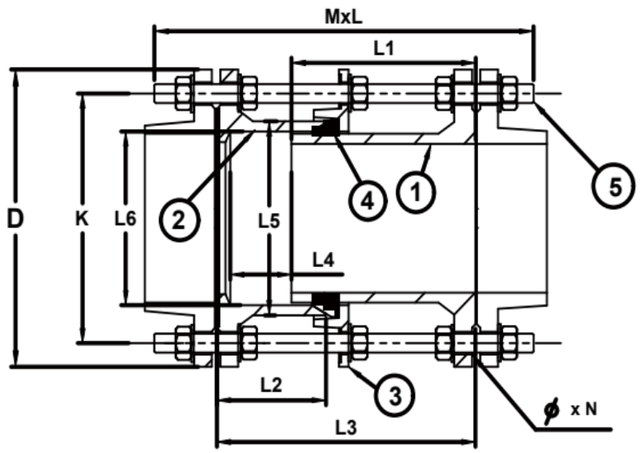

DIMENSIONS(MM)

SIZE	PN	D	K	L1	L2	L3	L4	L5	L6	ØXN	MXL	WEIGHT KG/PC
DN40	PN10/16/25	145	110	155	75	185	+/-25	76	60	19X4	M16X310	8.8
DN50	PN10/16/25	165	125	165	74	190	+/-25	80	68	19X4	M16X340	9.9
DN60	PN10/16/25	175	135	165	74	190	+/-25	95	83	19X4	M16X340	11.0
DN65	PN10/16/25	185	145	165	74	190	+/-25	95	83	19X4	M16X340	11.5
DN80	PN10/16/25	200	160	165	100	200	+/-25	123	104.5	19X8	M16X340	16.0
DN100	PN10/16	220	180	170	100	200	+/-25	143	123	19X8	M16X340	19.0
DN125	PN10/16	250	210	165	95	200	+/-25	170	149	19X8	M16X340	20.9
DN150	PN10/16	285	240	165	100	200	+/-25	197	175	23X8	M16X350	29.5
DN200	PN10	339	295	175	100	220	+/-25	247	228	23X8	M20X350	35.4
	PN16	339	295	175	100	220	+/-25	247	228	23X12	M20X350	39.0
DN250	PN10	399	350	183	100	230	+/-25	299	280	23X12	M20X390	50.0
	PN16	399	355	183	100	230	+/-25	299	280	28X12	M24X380	56.8
DN300	PN10	454	400	200	103	240	+/-25	352	333	23X12	M20X390	64.5
	PN16	454	410	200	103	240	+/-25	352	333	28X12	M24X410	72.0
DN350	PN10	505	460	200	110	240	+/-25	403	385	23X16	M20X400	80.0
	PN16	518	470	200	110	240	+/-25	403	385	28X16	M24X410	92.5
DN400	PN10	562	515	210	111	250	+/-25	453	435	28X16	M24X420	94.0
	PN16	579	525	210	111	250	+/-25	455	435	31X16	M27X430	119.7
DN450	PN10	615	565	225	115	270	+/-25	510	487	28X20	M24X440	122.0
	PN16	640	585	225	115	270	+/-25	510	487	31X20	M27X450	148.0
DN500	PN10	667	620	231	116	280	+/-25	559	538	28X20	M24X440	128.5
	PN16	715	650	231	116	280	+/-25	559	538	34X20	M30X460	195.0
DN600	PN10	777	725	250	110	300	+/-25	665	642	31X20	M27X460	177.5
	PN16	838	770	250	110	300	+/-25	664	642	37X20	M33X500	265.0
DN700	PN10	893	840	250	113	300	+/-25	771	746	31X24	M27X480	240.5
	PN16	910	840	250	113	300	+/-25	771	746	37X24	M33X500	292.5
DN800	PN10	1012	950	270	115	320	+/-25	876	847	34X24	M30X500	301.5
	PN16	1024	950	270	115	320	+/-25	876	850	40X24	M36X530	377.5
DN900	PN10	1112	1050	270	120	320	+/-25	981	954	34X28	M30X500	394.5
	PN16	1125	1050	270	120	320	+/-25	985	954	40X28	M36X530	470.0
DN1000	PN10	1227	1160	280	118	330	+/-25	1084	1054	37X28	M33X545	447.5
	PN16	1254	1170	280	118	330	+/-25	1084	1054	43X28	M39X570	627.9
DN1100	PN16	1349	1270	305	132	350	+/-25	1193	1162	45X32	M39X570	769.4
DN1200	PN10	1455	1380	302	126	360	+/-25	1295	1261	40X32	M36X580	639.5
	PN16	1483	1390	302	128	360	+/-25	1295	1261	49X32	M45X620	911.0
DN1400	PN10	1675	1590	340	130	390	+/-25	1510	1470	43X36	M39X640	1113.7
	PN16	1685	1590	340	130	390	+/-25	1510	1470	49X36	M45X640	1350.0
DN1600	PN10	1915	1820	376	150	430	+/-25	1716	1680	49X40	M45X750	1465.5
	PN16	1930	1820	389	166	440	+/-25	1716	1680	56X40	M52X780	1650.5

Please note dimension may vary at our discretion.

ООО «ТИ-СИСТЕМС» ИНЖИНИРИНГ И ПОСТАВКА ТЕХНОЛОГИЧЕСКОГО ОБОРУДОВАНИЯ
Интернет: www.tisys.ru www.tisys.kz www.tisys.by www.ти-системс.рф
Телефоны: +7 (495) 777-47-88, (925) 130-87-87, (925) 500-71-55, 54, 65
Эл. почта: info@tisys.ru info@tisys.kz info@tisys.by

RIGID TYPE DISMANTLING JOINT PN25

SPECIFICATIONS

Dismantling joint standard:
comply with EN545

Flange type:
EN1092-2 PN25



Working pressure and Temperature:
Size DN50 to DN2000
Working pressure PN25
Temperature from -10℃ to
120℃ for EPDM gasket
Temperature from -10℃ to
82℃ for NBR gasket

MATERIAL SPECIFICATION

SR.NO.	NAME	MATERIAL
1	Long body	Ductile Iron
2	Short body	Ductile Iron
3	Retainer	Ductile Iron
4	Gasket	EPDM/NBR
5	Tie rods	CS/SS

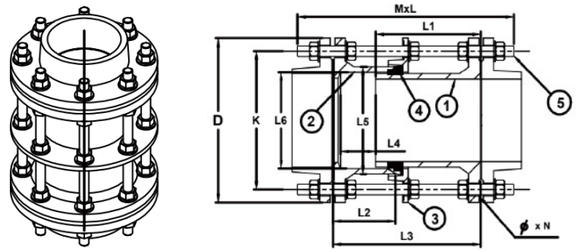

DIMENSIONS(MM)

SIZE	PN	D	K	L1	L2	L3	L4	L5	L6	ØXN	Ø
DN40	PN10/16/25	145	110	155	75	185	+/-25	76	60	19X4	19
DN50	PN10/16/25	165	125	165	74	190	+/-25	80	68	19X4	19
DN60	PN10/16/25	175	135	165	74	190	+/-25	95	83	19X4	19
DN65	PN10/16/25	185	145	165	74	190	+/-25	95	83	19X4	19
DN80	PN10/16/25	200	160	165	100	200	+/-25	123	104.5	19X8	19
DN100	PN25	235	190	170	100	200	+/-25	143	123	23X8	23
DN125	PN25	270	220	165	95	200	+/-25	170	149	28X8	28
DN150	PN25	300	250	165	100	200	+/-25	197	175	28X8	28
DN200	PN25	360	310	175	100	220	+/-25	247	228	28X12	28
DN250	PN25	425	370	183	100	230	+/-25	299	280	31X12	31
DN300	PN25	485	430	200	103	240	+/-25	352	333	31X16	31
DN350	PN25	555	490	200	110	240	+/-25	403	385	34X16	34
DN400	PN25	620	550	210	111	250	+/-25	453	435	37X16	37
DN450	PN25	670	600	225	115	270	+/-25	510	487	37X20	37
DN500	PN25	730	660	231	116	280	+/-25	559	538	37X20	37
DN600	PN25	845	770	250	110	300	+/-25	665	642	40X20	40
DN700	PN25	960	875	250	113	300	+/-25	771	746	43X24	43
DN800	PN25	1085	990	270	115	320	+/-25	876	847	49X24	49
DN900	PN25	1185	1090	270	120	320	+/-25	981	954	49X28	49
DN1000	PN25	1320	1210	280	118	330	+/-25	1084	1054	56X28	56
DN1100	PN25	1420	1310	305	132	350	+/-25	1193	1162	56X32	56
DN1200	PN25	1530	1420	302	126	360	+/-25	1295	1261	56X32	56
DN1400	PN25	1755	1640	340	130	390	+/-25	1510	1470	62X36	62
DN1600	PN25	1975	1860	389	166	440	+/-25	1716	1680	62X40	62

Please note dimension may vary at our discretion.

LIGHT DUTY DISMATNLING JOINT AS/BS TABLE D/E

SPECIFICATIONS

Dismantling joint standard:
comply with AS/NZS2280

Flange type:
AS2129 Table D/E &BS10 Table D/E



Working pressure and Temperature:
Size DN50 to DN1200,
Working pressure PN16
Temperature from -10℃ to
120℃ for EPDM gasket
Temperature from -10℃ to
82℃ for NBR gasket

MATERIAL SPECIFICATION

SR.NO.	NAME	MATERIAL
1	Long body	Ductile Iron
2	Short body	Ductile Iron
3	Retainer	Ductile Iron
4	Gasket	EPDM/NBR
5	Tie rods	CS/SS

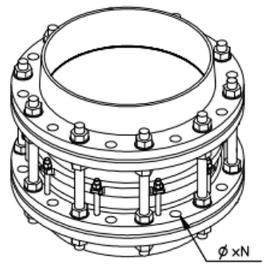

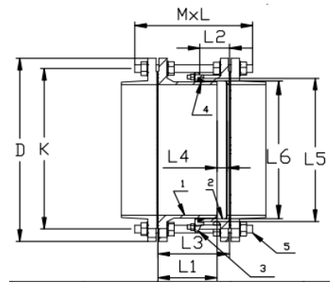

DIMENSIONS(MM)

SIZE	D	K	L3	L4	MXL-N	
					TABLE D	TABLE E
DN80	185	146	205	+/-25	M16x340-4	M16x340-4
DN100	215	178	205	+/-25	M16x340-4	M16x340-8
DN150	280	235	205	+/-25	M16x340-8	M20x340-8
DN200	335	292	215	+/-25	M16x350-8	M20x350-8
DN250	405	356	220	+/-25	M20x380-8	M20x380-12
DN300	455	406	240	+/-25	M20x400-12	M24x400-12
DN350	525	470	240	+/-25	M24x410-12	M24x410-12
DN400	580	521	250	+/-25	M24x430-12	M24x430-12
DN450	640	584	265	+/-25	M24x450-12	M24x450-16
DN500	705	641	275	+/-25	M24x460-16	M24x460-16
DN600	825	756	295	+/-25	M27x500-16	M30x500-16
DN700	910	845	300	+/-25	M27x500-20	M30x500-20
DN800	1060	984	320	+/-25	M33x530-20	M33x530-20
DN900	1175	1092	320	+/-25	M33x530-24	M33x530-24
DN1000	1255	1175	330	+/-25	M36x570-24	M36x570-24
DN1200	1490	1410	350	+/-25	M33x620-32	M36x620-32

Please note dimension may vary at our discretion.

ООО «ТИ-СИСТЕМС» ИНЖИНИРИНГ И ПОСТАВКА ТЕХНОЛОГИЧЕСКОГО ОБОРУДОВАНИЯ
Интернет: www.tisys.ru www.tisys.kz www.tisys.by www.ти-системс.рф
Телефоны: +7 (495) 777-47-88, (925) 130-87-87, (925) 500-71-55, 54, 65
Эл. почта: info@tisys.ru info@tisys.kz info@tisys.by

LIGHT DUTY DISMATNLING JOINT PN10/PN16

SPECIFICATIONS

Dismantling joint standard:
comply with EN545

Flange type:
BS EN1092

Working pressure and Temperature:
Size DN50 to DN1200,
Working pressure PN10/PN16
Temperature from -10℃ to
120℃ for EPDM gasket
Temperature from -10℃ to
82℃ for NBR gasket



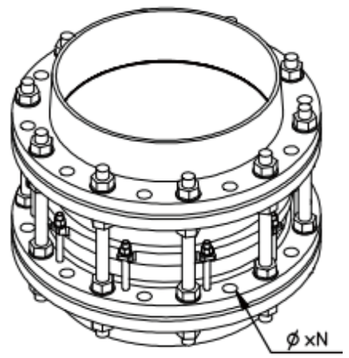

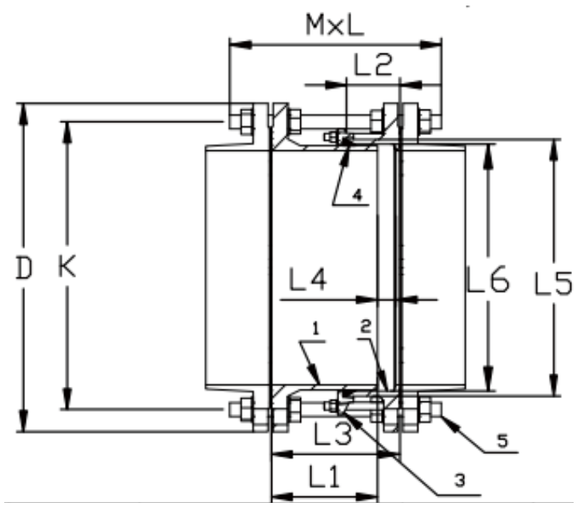

MATERIAL SPECIFICATION

SR.NO.	NAME	MATERIAL
1	Long body	Ductile Iron
2	Short body	Ductile Iron
3	Retainer	Ductile Iron
4	Gasket	EPDM/NBR
5	Tie rods	CS/SS

DIMENSIONS(MM)

SIZE	PN	D	K	L1	L2	L3	L4	L5	L6	ØXN	MXL
DN40	PN10/16/25	145	110	155	75	185	+/-25	76	60	19X4	M16X310
DN50	PN10/16/25	165	125	165	74	190	+/-25	80	68	19X4	M16X340
DN60	PN10/16/25	175	135	165	74	190	+/-25	95	83	19X4	M16X340
DN65	PN10/16/25	185	145	165	74	190	+/-25	95	83	19X4	M16X340
DN80	PN10/16/25	200	160	165	100	200	+/-25	123	104.5	19X8	M16X340
DN100	PN10/16	220	180	170	100	200	+/-25	143	123	19X8	M16X340
DN125	PN10/16	250	210	165	95	200	+/-25	170	149	19X8	M16X340
DN150	PN10/16	285	240	165	100	200	+/-25	197	175	23X8	M16X350
DN200	PN10	339	295	175	100	220	+/-25	247	228	23X8	M20X350
	PN16	339	295	175	100	220	+/-25	247	228	23X12	M20X350
DN250	PN10	399	350	183	100	230	+/-25	299	280	23X12	M20X390
	PN16	399	355	183	100	230	+/-25	299	280	28X12	M24X380
DN300	PN10	454	400	200	103	240	+/-25	352	333	23X12	M20X390
	PN16	454	410	200	103	240	+/-25	352	333	28X12	M24X410
DN350	PN10	505	460	200	110	240	+/-25	403	385	23X16	M20X400
	PN16	518	470	200	110	240	+/-25	403	385	28X16	M24X410
DN400	PN10	562	515	210	111	250	+/-25	453	435	28X16	M24X420
	PN16	579	525	210	111	250	+/-25	455	435	31X16	M27X430
DN450	PN10	615	565	225	115	270	+/-25	510	487	28X20	M24X440
	PN16	640	585	225	115	270	+/-25	510	487	31X20	M27X450
DN500	PN10	667	620	231	116	280	+/-25	559	538	28X20	M24X440
	PN16	715	650	231	116	280	+/-25	559	538	34X20	M30X460
DN600	PN10	777	725	250	110	300	+/-25	665	642	31X20	M27X460
	PN16	838	770	250	110	300	+/-25	664	642	37X20	M33X500
DN700	PN10	893	840	250	113	300	+/-25	771	746	31X24	M27X480
	PN16	910	840	250	113	300	+/-25	771	746	37X24	M33X500
DN800	PN10	1012	950	270	115	320	+/-25	876	847	34X24	M30X500
	PN16	1024	950	270	115	320	+/-25	876	850	40X24	M36X530
DN900	PN10	1112	1050	270	120	320	+/-25	981	954	34X28	M30X500
	PN16	1125	1050	270	120	320	+/-25	985	954	40X28	M36X530
DN1000	PN10	1227	1160	280	118	330	+/-25	1084	1054	37X28	M33X545
	PN16	1254	1170	280	118	330	+/-25	1084	1054	43X28	M39X570
DN1100	PN16	1349	1270	305	132	350	+/-25	1193	1162	45X32	M39X570
DN1200	PN10	1455	1380	302	126	360	+/-25	1295	1261	40X32	M36X580
	PN16	1483	1390	302	128	360	+/-25	1295	1261	49X32	M45X620
DN1400	PN10	1675	1590	340	130	390	+/-25	1510	1470	43X36	M39X640
	PN16	1685	1590	340	130	390	+/-25	1510	1470	49X36	M45X640
DN1600	PN10	1915	1820	376	150	430	+/-25	1716	1680	49X40	M45X750
	PN16	1930	1820	389	166	440	+/-25	1716	1680	56X40	M52X780

Please note dimension may vary at our discretion.

ООО «ТИ-СИСТЕМС» ИНЖИНИРИНГ И ПОСТАВКА ТЕХНОЛОГИЧЕСКОГО ОБОРУДОВАНИЯ
Интернет: www.tisys.ru www.tisys.kz www.tisys.by www.ти-системс.рф
Телефоны: +7 (495) 777-47-88, (925) 130-87-87, (925) 500-71-55, 54, 65
Эл. почта: info@tisys.ru info@tisys.kz info@tisys.by

UNIVERSAL COUPLING PN10/PN16/CLASS125&150

SPECIFICATIONS

Universal coupling standard:
comply with EN545

Coating standard:
EN30677

Test standard:
EN12266-1



Working pressure and Temperature:
Size DN40 to DN700,
Working pressure
PN10/PN16/class125&150
Temperature from -10℃ to 120℃
for EPDM gasket
Temperature from -10℃ to 82℃
for NBR gasket

Connection for pipes in material ductile iron,steel,PVC,AC etc which pipe OD is in our our range
Angular deflection ±6°
suitable for potable water,neutral liquids and sewage
WRAS approved is available upon request

MATERIAL SPECIFICATION

SR.NO.	NAME	MATERIAL
1	Center Sleeve	Carbon steel
2	End ring	Ductile iron
3	Gasket	EPDM/NBR
4	Bolt	Dacromet coated steel
5	Washer	Dacromet coated steel
6	Nut	Dacromet coated steel
7	Cap	Plastic

Options:Grade 4.8/6.8/8.8
carbon steel bolts with
galvanization/dacromet/teflon etc
Stainless steel
SS304/SS316/SS316L/A2/A4 etc bolts
FBE coating and Nylon 11
coating is available

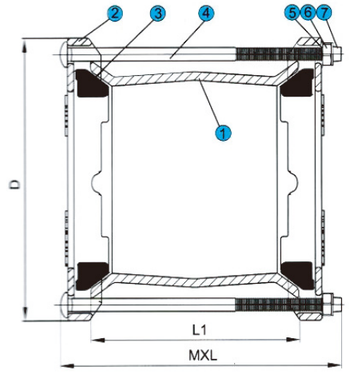

DIMENSIONS(MM)

SIZE	PIPE OD(MM)	D	L1		BOLT NO.-M×L	
			S	L	S	L
DN40	48-60	155	95	190	2-M12x170	2-M12x260
DN50	59-72	165	95	190	2-M12x170	2-M12x260
DN65	72-85	180	95	190	2-M12x170	2-M12x260
DN80	88-103	185	95	190	4-M12x180	4-M12x260
DN100	108-128	225	95	190	4-M12x180	4-M12x260
DN125	132-153	250	95	190	4-M12x180	4-M12x260
DN150	159-182	275	110	190	4-M12x210	4-M12x260
DN200	190-210	305	130	190	4-M12x220	4-M12x270
DN200	218-235	315	130	190	4-M12x220	4-M12x270
DN250	242-267	350	130	245	4-M12x220	4-M12x340
DN250	272-289	395	130	245	6-M12x220	6-M12x340
DN300	315-332	450	130	245	6-M12x220	6-M12x340
DN300	322-339	460	130	245	6-M12x220	6-M12x340

SIZE	PIPE OD(MM)	D	L1		BOLT NO.-M×L	
			S	L	S	L
DN300	340-360	460	130	245	6-M14x230	6-M14x350
DN350	351-378	510	130	245	8-M14x230	8-M14x350
DN350	374-391	520	130	245	8-M14x230	8-M14x350
DN350	386-410	524	130	245	8-M14x230	8-M14x350
DN400	417-437	556	130	245	8-M14x230	8-M14x350
DN450	438-458	594	130	245	10-M14x230	10-M14x350
DN450	476-493	615	130	245	10-M14x230	10-M14x350
DN500	500-516	623	130	245	10-M14x230	10-M14x350
DN500	500-532	667	150	245	10-M14x250	10-M14x380
DN500	526-546	666	150	245	10-M14x250	10-M14x350
DN500	540-570	686	150	245	10-M14x250	10-M14x350
DN600	600-630	745	150	245	10-M14x250	10-M14x350
DN600	630-650	770	150	245	10-M14x250	10-M14x350
DN700	730-745	874	160	245	10-M14x260	12-M14x350

Please note dimension may vary at our discretion
Other range is also available upon request

UNIVERSAL FLANGE ADAPTOR -PN10/16

SPECIFICATIONS

Universal flange adaptor standard:
comply with EN545

Coating standard:
EN30677

Test standard:
EN12266-1



Working pressure and Temperature:
Size DN40 to DN700,
working pressure PN10/16
Temperature from -10℃ to
120℃ for EPDM gasket
Temperature from -10℃ to
82℃ for NBR gasket

Connection for pipes in material ductile iron, steel, PVC, AC etc which pipe OD is in our range
Angular deflection ±3°
Suitable for potable water, neutral liquids and sewage
WRAS approved is available upon request

MATERIAL SPECIFICATION

SR.NO.	NAME	MATERIAL
1	Body	Ductile iron
2	End ring	Ductile iron
3	Gasket	EPDM
4	Bolt	GD. 6.8 CS
5	Washer	GD. 6.8 CS
6	Nut	GD. 6.8 CS
7	Cap	Plastic

Options: Grade 4.8/6.8/8.8
carbon steel bolts with
galvanization/dacromet/teflon etc,
SS304/SS316/SS316L etc bolts
FBE coating and Nylon 11
coating is available

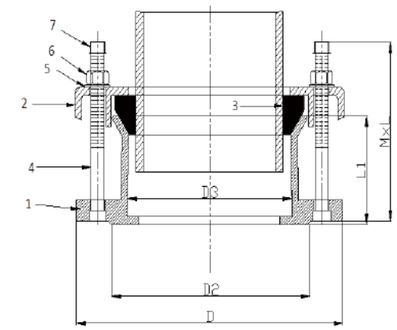

DIMENSIONS(MM)

SIZE	PIPE OD(MM)	D	D2	D3	L1	BOLT NO.-M×L
DN40	48-60	145	84	63	82	2-M12x130
DN50	59-72	169	99	75	82	4-M12x130
DN65	72-85	182	110	88	82	4-M12x130
DN80	88-103	209	124	106	82	4-M12x130
DN100	108-128	238	152	130.5	85	4-M12x130
DN125	132-153	257	180	156	82	4-M12x130
DN150	159-182	282	216	185	82	4-M12x130
DN200	190-210	337	245	213	82	4-M12x130
DN200	218-235	337	265	238	82	4-M12x130
DN250	242-267	408	316	270	95	6-M12x140
DN250	272-289	408	316	292	95	6-M12x140
DN300	315-332	454	368	335	95	6-M12x140
DN300	322-339	454	368	342	95	6-M12x140

SIZE	PIPE OD(MM)	D	D2	D3	L1	BOLT NO.-M×L
DN300	340-360	454	368	362	130	6-M14x185
DN350	351-378	520	425	380	112	8-M14x170
DN350	374-391	520	425	393	112	8-M14x170
DN350	386-410	535	425	412	140	8-M14x200
DN400	417-437	580	480	439	110	8-M14x170
DN450	438-458	640	530	460	113	10-M14x170
DN450	476-493	640	530	495	113	10-M14x170
DN500	500-516	715	585	521	110	10-M14x180
DN500	500-532	715	585	534	115	10-M14x180
DN500	526-546	715	585	548	113	10-M14x180
DN500	540-570	715	585	573	150	10-M14x220
DN600	630-650	838	682	652	115	10-M14x180
DN700	730-745	910	794	748	125	12-M14x185

Please note dimension may vary at our discretion. Other range is also available upon request

ООО «ТИ-СИСТЕМС» ИНЖИНИРИНГ И ПОСТАВКА ТЕХНОЛОГИЧЕСКОГО ОБОРУДОВАНИЯ
Интернет: www.tisys.ru www.tisys.kz www.tisys.by www.ти-системс.рф
Телефоны: +7 (495) 777-47-88, (925) 130-87-87, (925) 500-71-55, 54, 65
Эл. почта: info@tisys.ru info@tisys.kz info@tisys.by

UNIVERSAL COUPLING PN10/PN16/CLASS125&150

SPECIFICATIONS

Universal coupling standard:
comply with EN545

Coating standard:
EN30677

Test standard:
EN12266-1



Working pressure and Temperature:
Size DN50 to DN400,
Working pressure
PN10/PN16/class125&150
Temperature from -10℃ to
120℃ for EPDM gasket
Temperature from -10℃ to
82℃ for NBR gasket

Connection for pipes in material ductile iron,steel,PVC,AC etc which pipe OD is in our our range
Angular deflection ±6°
suitable for potable water,neutral liquids and sewage
WRAS approved is available upon request

MATERIAL SPECIFICATION

SR.NO.	NAME	MATERIAL
1	Center Sleeve	Carbon steel
2	End ring	Ductile iron
3	Gasket	EPDM/NBR
4	Bolt	Dacromet coated steel
5	Washer	Dacromet coated steel
6	Nut	Dacromet coated steel
7	Cap	Plastic

Options:Grade 4.8/6.8/8.8
carbon steel bolts with
galvanization/dacromet/teflon etc
Stainless steel SS304/SS316/
SS316L/A2/A4 etc bolts
FBE coating and Nylon 11
coating is available

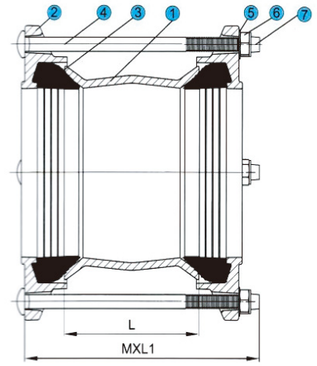

DIMENSIONS(MM)

SIZE	PIPE OD(MM)	L	MXL1	BOLT NO.	WEIGHT(KG)
DN50	58-74	100	M12x190	4	2.6
DN65	68-84	100	M12x190	4	3.9
DN80	84-105	100	M12x190	4	5.2
DN100	99-118	100	M12x190	4	5.5
DN100	109-133	100	M12x190	4	6.8
DN125	133-157	100	M12x190	4	6.8
DN150	157-182	115	M12x210	4	9.4
DN150	177-201	115	M12x210	4	9.8
DN200	194-215	115	M12x210	4	9.9
DN200	218-242	160	M12x230	6	14.4
DN225	242-268	160	M12x230	6	18.5
DN250	266-291	160	M12x250	6	18.6
DN250	280-305	160	M12x250	6	20.5
DN300	302-327	160	M12x250	6	22
DN300	324-350	160	M14x260	6	16.5
DN350	352-378	160	M14x260	8	19.9
DN350	384-410	160	M14x260	8	21.1
DN400	410-436	160	M14x260	8	21.8
DN400	436-462	160	M14x260	8	23.5

Please note dimension may vary at our discretion. Other range is also available upon request

UNIVERSAL FLANGE ADAPTOR PN10/PN16/CLASS125&150/TABLE D/TABLE E

SPECIFICATIONS

Universal flange adaptor standard:
comply with EN545

Coating standard:
EN30677

Test standard:
EN12266-1



Working pressure and Temperature:
Size DN50 to DN400,
Working pressure
PN10/PN16/class125&150/Table D/Table E
Temperature from -10℃ to
120℃ for EPDM gasket
Temperature from -10℃ to
82℃ for NBR gasket

Connection for pipes in material ductile iron,steel,PVC,AC etc which pipe OD is in our our range
Angular deflection ±3°
suitable for potable water,neutral liquids and sewage
WRAS approved is available upon request

MATERIAL SPECIFICATION

SR.NO.	NAME	MATERIAL
1	Body	Ductile Iron
2	End ring	Ductile iron
3	Gasket	EPDM
4	Bolt	Dacromet coated steel
5	Washer	Dacromet coated steel
6	Nut	Dacromet coated steel
7	Cap	Plastic

Options:Grade 4.8/6.8/8.8
carbon steel bolts with
galvanization/dacromet/teflon etc
Stainless steel
SS304/SS316/SS316L/A2/A4 etc bolts
FBE coating and Nylon 11
coating is available

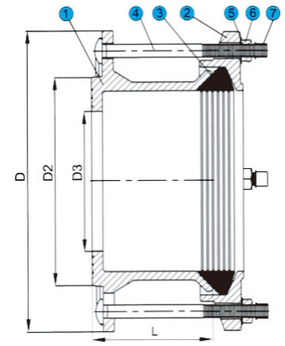

DIMENSIONS(MM)

SIZE	PIPE OD(MM)	D	D2	D3	L	MXL1	BOLT NO.	WEIGHT(KG)	FLANGE DESIGNATION			
									PN10/16	ANSI 125/150	TALBE D	TALBE E
DN50	58-74	166	110	50	100	M12x150	4	4.2	√	√	√	√
DN60	68-84	187	125	65	100	M12x150	4	5	√	√	√	√
DN80	84-105	200	140	80	100	M12x150	4	6.3	√	√	√	√
DN100	99-118	235	155	100	100	M12x150	4	6.8	√	√	√	√
DN100	109-133	235	155	100	105	M12x150	4	7.8	√	√	√	√
DN125	133-157	285	185	133	110	M12x170	4	11	√	√	√	√
DN150	157-182	285	215	150	110	M12x170	4	12.5	√	√		√
DN200	194-215	345	265	200	120	M12x170	4	15.5	√	√		√
DN200	218-242	345	265	200	120	M12x170	4	17.5	√	√		√
DN250	242-268	410	320	245	120	M12x170	6	20.5	√	√		
DN250	266-291	410	320	250	120	M12x170	6	21	√	√		
DN250	280-305	410	320	250	120	M12x170	6	25.5	√	√		
DN300	302-327	490	370	300	120	M12x170	6	27	√	√		√
DN300	324-350	455	410	310	140	M12x190	6	24	√			
DN350	352-378	520	470	350	120	M14x170	8	25.4	√			
DN350	384-410	520	470	360	140	M14x190	8	29.2	√			
DN400	384-410	580	525	400	160	M14x210	8	29.2	√			
DN400	410-436	580	525	400	160	M14x210	8	34.5	√			
DN400	436-462	580	525	410	160	M14x210	8	36.8	√			

Please note dimension may vary at our discretion. Other range is also available upon request

ООО «ТИ-СИСТЕМС» ИНЖИНИРИНГ И ПОСТАВКА ТЕХНОЛОГИЧЕСКОГО ОБОРУДОВАНИЯ
Интернет: www.tisys.ru www.tisys.kz www.tisys.by www.ти-системс.рф
Телефоны: +7 (495) 777-47-88, (925) 130-87-87, (925) 500-71-55, 54, 65
Эл. почта: info@tisys.ru info@tisys.kz info@tisys.by

HEAVY TYPE GIBAULT FOR PVC PIPE

SPECIFICATIONS

Standard:
comply with EN545

Working pressure and Temperature
Size OD50 to OD315, working pressure PN10/16
Temperature from -10℃ to 120℃ for EPDM gasket
Temperature from -10℃ to 82℃ for NBR gasket
WRAS certificate is upon client request



MATERIAL SPECIFICATION

NO.	NAME	MATERIAL
1	End ring	Ductile iron/Gray cast iron
2	Sleeve	Ductile iron/Gray cast iron
3	Gasket	EPDM
4	Bolt	CS/SS
5	Washer	CS/SS
6	Nut	CS/SS

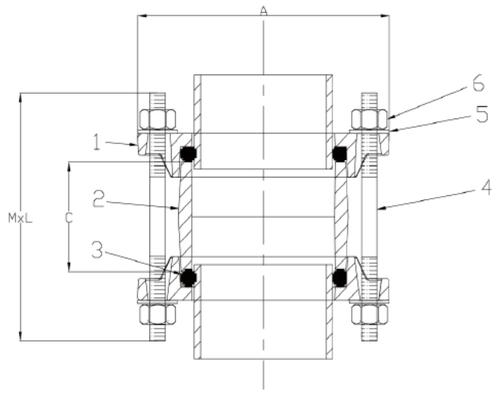

DIMENSIONS(MM)

SIZE	A(MM)	C(MM)	BOLTS NO.	MXL
50	124	64	2	M10x140
63	137	64	2	M10x140
75	149	64	2	M10x140
90	164	64	2	M10x140
110	184	64	3	M10x140
125	204	64	3	M12x145
140	220	74	3	M12x155
160	242	74	3	M12x155
180	266	72	3	M12x155
200	286	72	3	M12x155
225	326	80	3	M14x175
250	349	78	4	M14x175
280	380	78	4	M14x175
315	416	96	4	M14x200

GIBAULT JOINT FOR PVC PIPE(NEW TYPE)

SPECIFICATIONS

Gibault joint standard:
comply with EN545

Coating standard:
EN30677

Test standard:
EN12266-1



Working pressure and Temperature:
Size OD63 to OD400,
Working pressure PN10/PN16
Temperature from -10℃ to
120℃ for EPDM gasket
Temperature from -10℃ to
82℃ for NBR gasket

Suitable for potable water,neutral liquids and sewage
WRAS approved is available upon request

MATERIAL SPECIFICATION

NO.	NAME	MATERIAL
1	End ring	Ductile ron
2	Sleeve	Carbon steel
3	Gasket	EPDM/NBR
4	Bolt	Gal. steel/Dacromet coated steel/SS
5	Washer	Gal. steel/Dacromet coated steel/SS
6	Nut	Gal. steel/Dacromet coated steel/SS
7	Cap	Plastic

Options:Grade 4.8/6.8/8.8
carbon steel bolts with
galvanization/dacromet/teflon
etcmet/teflon etc
Stainless steel
SS304/SS316/SS316L/A2/A4 etc bolts
FBE coating and Nylon 11
coating is available

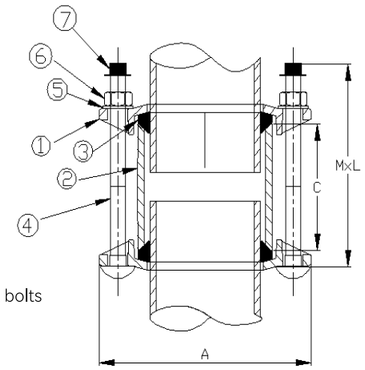

DIMENSIONS(MM)

SIZE	A(MM)	C(MM)	BOLTS NO.	MXL
63	142	300	3	M12x360
75	154.4	300	3	M12x360
90	169.4	300	3	M12x360
110	192.4	300	3	M12x360
125	207.4	300	3	M12x360
140	222.4	300	3	M12x360
160	246.4	300	4	M12x360
180	270	300	4	M12x360
200	287	300	4	M12x360
225	315	300	4	M12x360
250	338	300	6	M12x360
280	370	300	6	M12x360
315	403	300	6	M12x360
355	450	300	8	M12x380
400	514	300	8	M12x380

Please note dimension may vary at our discretion

ООО «ТИ-СИСТЕМС» ИНЖИНИРИНГ И ПОСТАВКА ТЕХНОЛОГИЧЕСКОГО ОБОРУДОВАНИЯ
Интернет: www.tisys.ru www.tisys.kz www.tisys.by www.ти-системс.рф
Телефоны: +7 (495) 777-47-88, (925) 130-87-87, (925) 500-71-55, 54, 65
Эл. почта: info@tisys.ru info@tisys.kz info@tisys.by

GIBAULT JOINT FOR PVC PIPE (WITH ROUND GASKET)

SPECIFICATIONS

Gibault joint standard:
comply with EN545

Coating standard:
EN30677

Test standard:
EN12266-1



Working pressure and Temperature:
Size OD63 to OD500,
Working pressure PN10/PN16
Temperature from -10℃ to
120℃ for EPDM gasket
Temperature from -10℃ to
82℃ for NBR gasket

Suitable for potable water,neutral liquids and sewage
WRAS approved is available upon request

MATERIAL SPECIFICATION

SR.NO.	NAME	MATERIAL
1	Center Sleeve	Carbon steel
2	End ring	Ductile iron
3	Gasket	EPDM/NBR
4	Bolt	Gal. steel
5	Washer	Gal. steel
6	Nut	Gal. steel
7	Cap	Plastic

Options:Grade 4.8/6.8/8.8
carbon steel bolts with
galvanization/dacromet/teflon etc
Stainless steel
SS304/SS316/SS316L/A2/A4 etc bolts
FBE coating and Nylon 11
coating is available

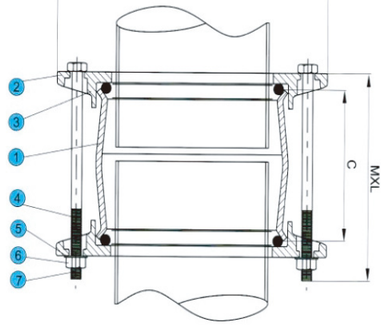

DIMENSIONS(MM)

PVC PIPE OD	A(MM)	C(MM)	BOLTS NO.	MXL	WEIGHT(KG)
63	136	125	2	M12x180	1.7
75	150	125	2	M12x180	2.12
90	164	125	3	M12x180	2.48
110	185	145	3	M12x200	3.31
125	205	145	3	M12x200	3.69
140	224	153	4	M12x200	4.66
160	240	185	4	M12x240	6.57
180	275	181	4	M12x240	7.5
200	288	185	6	M12x240	8.02
250	339.5	202	6	M12x260	13.9
315	412	202	6	M12x260	17.14
400	495	202	8	M12x260	21.79
500	592	202	10	M12x260	26.76

Please note dimension may vary at our discretion

GIBAULT JOINT FOR PVC PIPE (WITH SQUARE GASKET)

SPECIFICATIONS

Gibault joint standard:
comply with EN545

Coating standard:
EN30677

Test standard:
EN12266-1



Working pressure and Temperature:
Size OD50 to OD500,
Working pressure PN10/PN16
Temperature from -10℃ to
120℃ for EPDM gasket
Temperature from -10℃ to
82℃ for NBR gasket

Suitable for irrigation system

MATERIAL SPECIFICATION

SR.NO.	NAME	MATERIAL
1	Center Sleeve	Grey cast iron/Ductile iron
2	End ring	Grey cast iron/Ductile iron
3	Gasket	EPDM/NBR
4	Bolt	Gal. steel
5	Washer	Gal. steel
6	Nut	Gal. steel
7	Cap	Plastic

Options:Grade 4.8/6.8/8.8
carbon steel bolts with
galvanization/dacromet/teflon etc
Stainless steel
SS304/SS316/SS316L/A2/A4
etc bolts

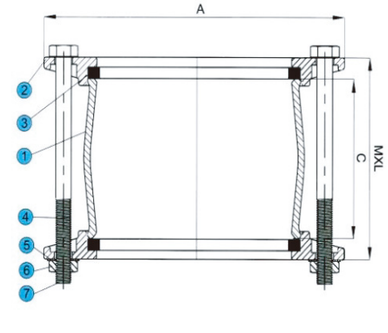

DIMENSIONS(MM)

PVC PIPE OD	A(MM)	C(MM)	BOLTS NO.	MXL	WEIGHT(KG)
50	130	80	2	M10x160	2.2
63	137	100	2	M10x160	2.2
75	149	100	2	M10x160	2.7
90	164	120	2	M10x180	3
110	184	120	3	M10x180	4.5
125	199	120	3	M12x190	6.5
140	214	120	3	M12x190	7
160	234	140	3	M12x210	8
180	254	140	3	M12x210	10
200	274	140	3	M12x210	12
250	341	160	4	M14x240	19
315	406	160	4	M14x240	25
400	495	160	6	M14x240	30
500	600	160	6	M14x240	40

Please note dimension may vary at our discretion

ООО «ТИ-СИСТЕМС» ИНЖИНИРИНГ И ПОСТАВКА ТЕХНОЛОГИЧЕСКОГО ОБОРУДОВАНИЯ
Интернет: www.tisys.ru www.tisys.kz www.tisys.by www.ти-системс.рф
Телефоны: +7 (495) 777-47-88, (925) 130-87-87, (925) 500-71-55, 54, 65
Эл. почта: info@tisys.ru info@tisys.kz info@tisys.by

DEDICATED FLANGE ADAPTOR PN10/PN16

SPECIFICATIONS

Dedicated flange adaptor standard:
comply with EN545

Flange standard:
EN1092-2

Coating standard:
EN30677

Test standard:
EN12266-1

Working pressure and Temperature:
Size DN40 to DN2000,
Working pressure PN10/PN16
Temperature from -10℃ to
120℃ for EPDM gasket
Temperature from -10℃ to
82℃ for NBR gasket

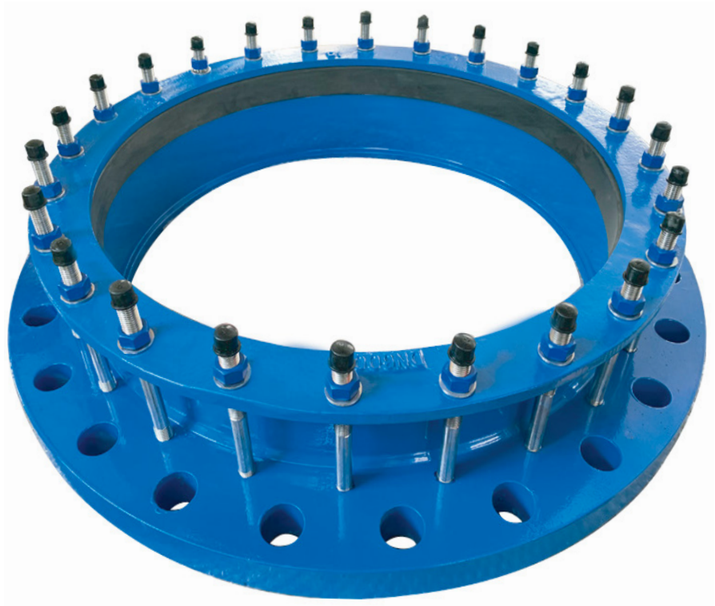

Connection for EN545/ISO2531 ductile iron pipe
Angular deflection smaller and equal to DN600 is ±4°C,
DN700-DN800 is ±3°,DN900-DN1200 is ±2°
suitable for potable water,neutral liquids and sewage
WRAS approved is available upon request

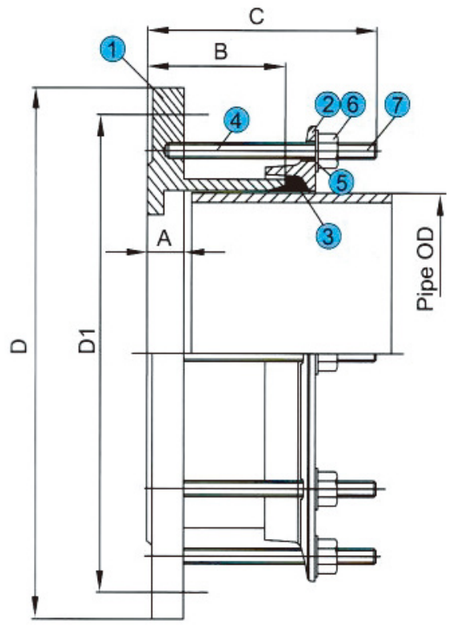

MATERIAL SPECIFICATION

SR.NO.	NAME	MATERIAL
1	Body	Ductile iron
2	End ring	Ductile iron
3	Gasket	EPDM
4	Bolt	Gal. steel
5	Washer	Gal. steel
6	Nut	Gal. steel
7	Cap	Plastic

Options:Grade 4.8/6.8/8.8
carbon steel bolts with galvanization/dacromet/teflon etc
Stainless steel SS304/SS316/SS316L/A2/A4 etc bolts
FBE coating and Nylon 11 coating is available

DIMENSIONS(MM)

SIZE	PIPE OD	B	C	A	PN10 FLANGE DRILLING			PN16 FLANGE DRILLING			BOLTS NO.	BOLTS SIZE (MXL)
					D	D1	N-ØD	D	D1	N-ØD		
DN40	56	73	105	19	150	110	4-19	150	110	4-19	4	M12X100
DN50	66	73	105	19	165	125	4-19	165	125	4-19	4	M12X100
DN60	77	73	105	19	175	135	4-19	175	135	4-19	4	M12X100
DN65	82	73	105	19	185	145	4-19	185	145	4-19	4	M12X100
DN80	98	73	105	19	200	160	8-19	200	160	8-19	4	M12X100
DN100	118	73	105	19	220	180	8-19	220	180	8-19	4	M12X100
DN125	144	76	115	19	250	210	8-19	250	210	8-19	4	M12X100
DN150	170	76	115	19	285	240	8-23	285	240	8-23	4	M12X110
DN200	222	76	115	20	340	295	8-23	340	395	12-23	4	M12X110
DN250	274	90	130	22	400	350	12-23	400	355	12-28	6	M12X120
DN300	326	90	130	24.5	455	400	12-23	455	410	12-28	6	M12X120
DN350	378	110	180	24.5	505	460	16-23	520	470	16-28	8	M16X170
DN400	429	110	180	24.5	565	515	16-28	580	525	16-31	8	M16X170
DN450	480	110	190	24.5	615	565	20-28	640	585	20-31	10	M16X170
DN500	532	115	190	26.5	670	620	20-28	715	650	20-34	10	M16X180
DN600	635	115	190	30	780	725	20-31	840	770	20-37	10	M16X180
DN700	738	115	190	32.5	895	840	24-31	910	840	24-37	12	M16X180
DN800	842	115	190	35	1015	950	24-34	1025	950	24-40	12	M16X180
DN900	942	120	190	37.5	1115	1050	28-34	1125	1050	28-40	14	M16X180
DN1000	1048	120	190	40	1230	1160	28-37	1255	1170	28-43	14	M16X180
DN1200	1255	130	190	45	1455	1380	32-40	1485	1390	32-49	16	M16X180
DN1400	1462	130	190	46	1675	1590	36-43	1685	1590	36-49	18	M20x200
DN1600	1668	190	275	49	1915	1820	40-49	1930	1820	40-56	20	M20x240
DN1800	1875	190	275	52	2115	2020	44-49	2130	2020	44-56	22	M20x240
DN2000	2082	190	275	55	2325	2230	48-49	2345	2230	48-62	24	M20x240

Please note dimension may vary at our discretion

ООО «ТИ-СИСТЕМС» ИНЖИНИРИНГ И ПОСТАВКА ТЕХНОЛОГИЧЕСКОГО ОБОРУДОВАНИЯ
Интернет: www.tisys.ru www.tisys.kz www.tisys.by www.ти-системс.рф
Телефоны: +7 (495) 777-47-88, (925) 130-87-87, (925) 500-71-55, 54, 65
Эл. почта: info@tisys.ru info@tisys.kz info@tisys.by

STEP COUPLING PN10/PN16/CLASS125&150

SPECIFICATIONS

Step coupling standard:
comply with EN545

Coating standard:
EN30677

Test standard:
EN12266-1



Working pressure and Temperature:
Size DN50 to DN300,
Working pressure
PN10/PN16/Class125&150
Temperature from -10℃ to
120℃ for EPDM gasket
Temperature from -10℃ to
82℃ for NBR gasket

Connection for pipes in material ductile iron,steel,PVC,AC etc which pipe OD is in our our range
Angular deflection ±6°
suitable for potable water,neutral liquids and sewage
WRAS approved is available upon request

MATERIAL SPECIFICATION

SR.NO.	NAME	MATERIAL
1	Center Sleeve	Carbon steel
2	End ring	Ductile iron
3	Gasket	EPDM/NBR
4	Bolt	Gal. steel
5	Washer	Gal. steel
6	Nut	Gal. steel
7	Cap	Plastic

Options:Grade 4.8/6.8/8.8
carbon steel bolts with
galvanization/dacromet/teflon etc
Stainless steel
SS304/SS316/SS316L/A2/A4
etc bolts

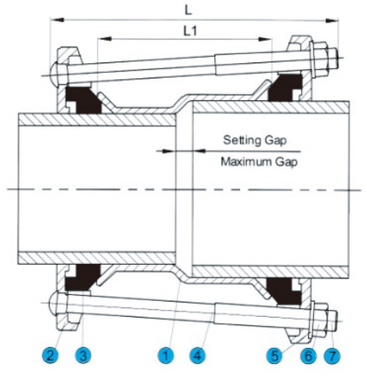

DIMENSIONS(MM)

SIZE RANGE				OVERALL LENGTH	SLEEVE LENGTH	SETTING GAP	MAX GAP	BOLTS NO.&SIZE	WEIGHT
SMALL PIPE O.D.		LARGE PIPE O.D.							
MIN	MAN	MIN	MAN	L	L1				KG
59	72	68	84	210	115	20	40	4-M12x190	2.5
59	72	88	103	210	115	20	40	4-M12x190	3.9
68	84	88	103	210	115	20	40	4-M12x190	4
88	103	107	128	210	115	20	40	4-M12x190	5.1
107	128	132	153	220	115	20	40	4-M12x210	6.8
132	153	159	182	220	125	20	40	4-M12x220	8.2
159	182	192	210	230	125	25	50	4-M12x220	9.2
192	210	218	235	230	135	25	50	4-M12x230	10.1
218	235	242	267	230	135	25	50	4-M12x230	14
242	267	272	289	230	135	25	50	4-M12x230	15.5
272	289	315	332	230	135	25	50	4-M12x230	20.3

Please note dimension may vary at our discretion

RESTRAINED FLANGE ADAPTOR FOR HDPE PIPE

SPECIFICATIONS

Restrained flange adaptor standard:
comply with EN545

Flange standard:
EN1092-2

Coating standard:
EN30677



Working pressure and Temperature:
Size DN50 to DN300,
Working pressure PN10/PN16
Temperature from -10℃ to
120℃ for EPDM gasket
Temperature from -10℃ to
82℃ for NBR gasket

Test standard:
EN12266-1

Connection for HDPE pipe
suitable for potable water,neutral liquids and sewage
WRAS approved is available upon request

MATERIAL SPECIFICATION

SR.NO.	NAME	MATERIAL
1	Body	Ductile iron
2	End ring	Ductile iron
3	Gasket	EPDM
4	Grip ring	Brass
5	Bolt	Gal. steel
6	Washer	Gal. steel

Options:Grade 4.8/6.8/8.8
carbon steel bolts with
galvanization/dacromet/teflon etc
Stainless steel
SS304/SS316/SS316L/A2/A4 etc bolts
FBE coating and Nylon 11
coating is available

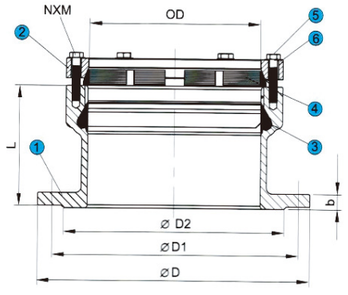

DIMENSIONS(MM)

DN	PIPE OD	D1	D	L	NXM
50	63	125	165	74	M10x2
65	75	145	185	74	M10x4
80	90	160	200	76	M10x4
100	110	180	220	76	M10x4
125	125	210	250	80	M10x4
125	140	210	250	80	M10x4
150	160	240	285	90	M10x4
150	180	240	285	96	M10x4
200	225	295	340	110	M10x4
250	250	350	400	130	M10x6
250	280	350	400	125	M10x6
300	315	410	455	150	M10x6

Please note dimension may vary at our discretion

ООО «ТИ-СИСТЕМС» ИНЖИНИРИНГ И ПОСТАВКА ТЕХНОЛОГИЧЕСКОГО ОБОРУДОВАНИЯ
Интернет: www.tisys.ru www.tisys.kz www.tisys.by www.ти-системс.рф
Телефоны: +7 (495) 777-47-88, (925) 130-87-87, (925) 500-71-55, 54, 65
Эл. почта: info@tisys.ru info@tisys.kz info@tisys.by

DEDICATED COUPLING FOR DUCTILE IRON PIPE PN10/PN16

SPECIFICATIONS

Dedicated coupling standard:
comply with EN545

Test standard:
EN12266-1

Coating standard:
EN30677

Working pressure and Temperature:
size DN40 to DN2000,
Working pressure PN10/PN16
Temperature from -10℃ to
120℃ for EPDM gasket
Temperature from -10℃ to
82℃ for NBR gasket



Connection for EN545/ISO2531 ductile iron pipe
Angular deflection ±4℃
suitable for potable water,neutral liquids and sewage
WRAS approved is available upon request

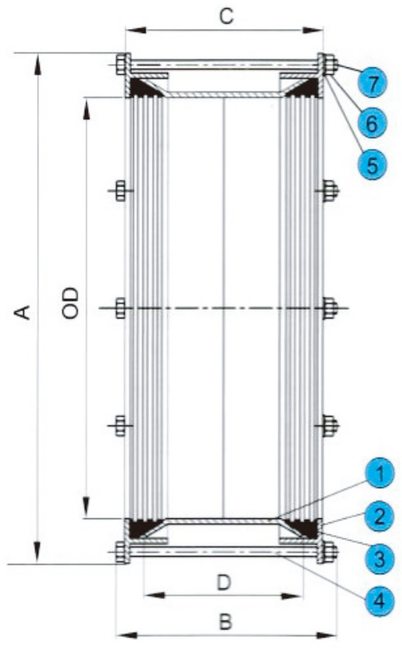

MATERIAL SPECIFICATION

SR.NO.	NAME	MATERIAL
1	Center Sleeve	Carbon steel
2	End ring	Ductile iron
3	Gasket	EPDM
4	Bolt	Gal. steel
5	Washer	Gal. steel
6	Nut	Gal. steel
7	Cap	Plastic

Options:Grade 4.8/6.8/8.8
carbon steel bolts with galvanization/dacromet/teflon etc
Stainless steel SS304/SS316/SS316L/A2/A4 etc bolts
FBE coating and Nylon 11 coating is available

DIMENSIONS(MM)

SIZE	PIPE OD	A	B	C	D	BOLTS NO.	BOLTS SIZE (MXL)
DN40	56	120	166	125	102	2	M12X158
DN50	66	126	166	125	102	2	M12X158
DN60	77	135	166	125	102	2	M12X158
DN65	82	156	166	125	102	2	M12X158
DN80	98	184	166	130	102	4	M12X158
DN100	118	205	166	130	102	4	M12X158
DN125	144	232	166	130	102	4	M12X158
DN150	170	264	173	133	102	4	M12X165
DN200	222	315	173	133	102	6	M12X165
DN250	274	374	173	136	102	6	M12X165
DN300	326	426	173	136	102	6	M12X165
DN350	378	494	254	200	152	8	M16X240
DN400	429	544	254	200	152	8	M16X240
DN450	480	595	254	200	152	10	M16X240
DN500	532	650	254	210	152	10	M16X240
DN600	635	753	254	210	152	12	M16X240
DN700	738	858	254	210	152	12	M16X240
DN800	842	962	254	210	152	12	M16X240
DN900	942	1070	280	238	178	14	M16X280
DN1000	1048	1173	280	238	178	14	M16X280
DN1100	1152	1282	280	240	178	16	M16X280
DN1200	1255	1385	280	240	178	18	M16X280
DN1400	1462	1592	295	250	178	20	M20X280
DN1600	1668	1798	295	250	178	24	M20X280
DN1800	1875	2015	375	320	254	32	M20X360
DN2000	2082	2222	375	320	254	36	M20X360

Please note dimension may vary at our discretion

ООО «ТИ-СИСТЕМС» ИНЖИНИРИНГ И ПОСТАВКА ТЕХНОЛОГИЧЕСКОГО ОБОРУДОВАНИЯ
Интернет: www.tisys.ru www.tisys.kz www.tisys.by www.ти-системс.рф
Телефоны: +7 (495) 777-47-88, (925) 130-87-87, (925) 500-71-55, 54, 65
Эл. почта: info@tisys.ru info@tisys.kz info@tisys.by

RESTRAINED COUPLING FOR HDPE PIPE PN10/PN16

SPECIFICATIONS



Restrained coupling standard:
comply with EN545

Coating standard:
EN30677

Test standard:
EN12266-1

Working pressure and Temperature:
Size DN50 to DN300,
Working pressure PN10/PN16
Temperature from -10℃ to
120℃ for EPDM gasket
Temperature from -10℃ to
82℃ for NBR gasket

Connection for HDPE pipe
suitable for potable water,neutral liquids and sewage
WRAS approved is available upon request

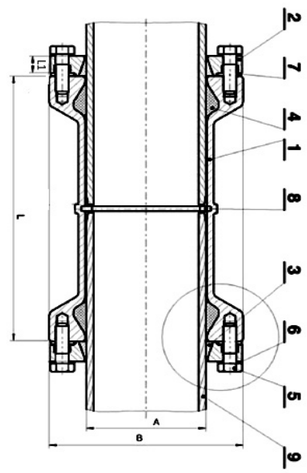

MATERIAL SPECIFICATION

SR.NO.	NAME	MATERIAL
1	Body	Ductile iron
2	Thighten Ring	Ductile iron
3	Ring	Bronze/brass(MS 58)
4	Gasket	EPDM
5	Bolt	SS304
6	Washer	SS304
7	Bolt holder	PE-HD
8	Limit Ring	Polyacetal
9	Pipe	PE-HD/PVC

Options:Grade 4.8/6.8/8.8
carbon steel bolts with
galvanization/dacromet/teflon etc
Stainless steel
SS304/SS316/SS316L/A2/A4 etc bolts
FBE coating and Nylon 11
coating is available

DIMENSIONS(MM)

A	L1	L	B	BOLT MANO.
63	20	125	130	M10x2
75	21	126	142	M10x4
90	21	128	160	M10x4
110	22	130	180	M10x4
125	22.5	134	195	M10x4
140	22.5	145	221	M10x4
160	23.5	170	235	M10x4
180	23.5	185	255	M10x4
200	25	210	274	M10x4
225	25	215	302	M10x4
250	25	240	328	M10x6
280	25	250	358	M10x6
315	25	300	392	M10x6

Please note dimension may vary at our discretion

RESTRAINED FLANGE ADAPTOR FOR PE PIPE –PN10/16

SPECIFICATIONS



Restrained flange adaptor standard:
comply with EN545

Coating standard:
EN30677

Test standard:
EN12266-1

Working pressure and Temperature:
Size DN50 to DN300,
Working pressure PN10/PN16
Temperature from -10℃ to
120℃ for EPDM gasket
Temperature from -10℃ to
82℃ for NBR gasket

Connection for HDPE pipe
Suitable for potable water,neutral liquids and sewage
WRAS approved is available upon request

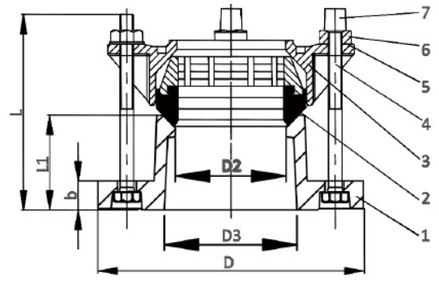

MATERIAL SPECIFICATION

SR.NO.	NAME	MATERIAL
1	Body	Ductile iron
2	Sealing ring	EPDM+Brass
3	End ring	Ductile iron
4	Bolts	Carbon steel
5	Washer	Carbon steel
6	Nuts	Carbon steel
7	Cap	Plastic

Options:Grade 4.8/6.8/8.8 carbon steel bolts with
galvanization/dacromet/teflon etc
Stainless steel SS304/SS316/SS316L etc bolts
FBE coating and Nylon 11 coating is available

DIMENSIONS(MM)

DN	OD	D2	D3	D	B	L1	L	SIZE
50	50	53.5	62	165	19	63	110	M12x2
50/60/65	63	67	73	185	19	63	110	M12x2
60/65	75	79	87	185	19	63	110	M12x2
80	90	94	102	200	19	63	110	M12x4
100	110	114	122	220	19	63	110	M12x4
125	125	129	137	245	19	63	110	M12x4
150	160	164.5	173	285	19	65	110	M12x4
150	180	184.5	193	285	19	65	110	M12x4
200	200	205	215	340	19	75	120	M12x4
250	250	255	265	400	22	75	120	M12x6
300	315	320	329	455	24	85	130	M12x6

Please note dimension may vary at our discretion

ООО «ТИ-СИСТЕМС» ИНЖИНИРИНГ И ПОСТАВКА ТЕХНОЛОГИЧЕСКОГО ОБОРУДОВАНИЯ
Интернет: www.tisys.ru www.tisys.kz www.tisys.by www.ти-системс.рф
Телефоны: +7 (495) 777-47-88, (925) 130-87-87, (925) 500-71-55, 54, 65
Эл. почта: info@tisys.ru info@tisys.kz info@tisys.by

RESTRAINED COUPLING FOR PE PIPE –PN10/16

SPECIFICATIONS

Restrained coupling standard:
comply with EN545

Coating standard:
EN30677

Test standard:
EN12266-1



Working pressure and Temperature:
Size DN50 to DN300,
Working pressure PN10/PN16
Temperature from -10℃ to
120℃ for EPDM gasket
Temperature from -10℃ to
82℃ for NBR gasket

Connection for HDPE pipe
suitable for potable water,neutral liquids and sewage
WRAS approved is available upon request

MATERIAL SPECIFICATION

SR.NO.	NAME	MATERIAL
1	Center sleeve	Ductile iron
2	Sealing ring	EPDM+Brass
3	End ring	Ductile iron
4	Bolts	Carbon steel
5	Washer	Carbon steel
6	Nuts	Carbon steel
7	Cap	Plastic

Options:Grade 4.8/6.8/8.8
carbon steel bolts with
galvanization/dacromet/teflon etc
Stainless steel
SS304/SS316/SS316L/A2/A4 etc bolts
FBE coating and Nylon 11
coating is available

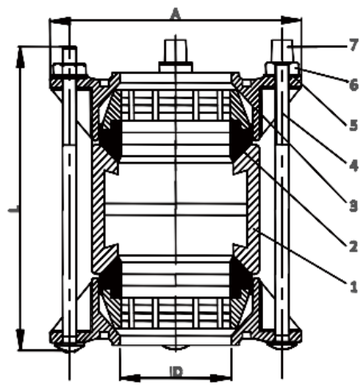

DIMENSIONS(MM)

OD	ID	A	L	BOLT SIZE
50	53.5	140	180	M12x2
63	67	153	180	M12x2
75	79	166	180	M12x2
90	94	193	180	M12x4
110	114	215	180	M12x4
125	129	229	180	M12x4
160	164.5	265	180	M12x4
180	184.5	275	180	M12x4
200	205	306	210	M12x4
250	255	357	210	M12x6
315	320	422	230	M12x6

Please note dimension may vary at our discretion

RESTRAINED FLANGE ADAPTOR PN10/PN16–BIG SIZE

SPECIFICATIONS

Restrained flange adaptor standard:
comply with EN545/EN12842

Coating standard:
EN30677

Flange standard:
EN1092-2



Working pressure and Temperature:
Size DN300 to DN1200,
Working pressure PN10/PN16
Temperature from -10℃ to
120℃ for EPDM gasket
Temperature from -10℃ to
82℃ for NBR gasket

Test standard:
EN12266-1

Connection for HDPE pipe
Angular deflection ±3°
suitable for potable water,neutral liquids and sewage
WRAS approved is available upon request

MATERIAL SPECIFICATION

SR.NO.	NAME	MATERIAL
1	Body	Ductile iron
2	Gasket	EPDM
3	Threaded tie rods	Gla.steel grade 4.8
4	Grip	zinc plated cast iron +carbon steel grade 4.8
5	End ring	Ductile iron

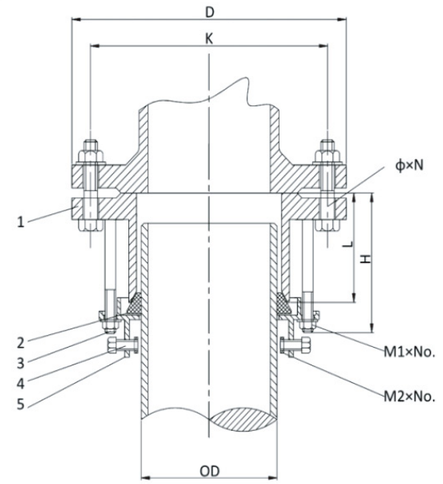

DIMENSIONS(MM)

DN	OD	D	K	L	H	ΦxN(mm)	M1xNo.(mm)	M2xNo.(mm)	NOTE
300	355	455	410	140	200	28X12	M16x6	M16x6	Steped
350	355	520	470	100	170	28X16	M16x8	M16x8	Straight
400	425	580	525	150	220	31X16	M16x8	M16x8	Steped
400	400	580	525	100	170	31X16	M16x8	M16x8	Straight
450	455	640	585	100	170	31X20	M16x10	M16x10	Straight
500	500	715	650	110	190	34X20	M16x10	M16x10	Straight
600	630	840	770	110	190	37X20	M16x10	M16x10	Straight
700	710	910	840	120	200	37X24	M16x12	M16x12	Straight
800	800	1025	950	120	210	40X24	M16x12	M16x12	Straight
900	900	1125	1050	140	240	40X28	M16x14	M16x14	Straight
1000	1000	1485	1170	140	240	43X28	M16x14	M16x14	Straight
1200	1200	1685	1390	150	260	49X32	M16x16	M16x16	Straight

Please note dimension may vary at our discretion

ООО «ТИ-СИСТЕМС» ИНЖИНИРИНГ И ПОСТАВКА ТЕХНОЛОГИЧЕСКОГО ОБОРУДОВАНИЯ
Интернет: www.tisys.ru www.tisys.kz www.tisys.by www.ти-системс.рф
Телефоны: +7 (495) 777-47-88, (925) 130-87-87, (925) 500-71-55, 54, 65
Эл. почта: info@tisys.ru info@tisys.kz info@tisys.by

RESTRAINED COUPLING PN10/PN16-BIG SIZE

SPECIFICATIONS

Restrained coupling standard:
comply with EN545/EN12842

Coating standard:
EN30677

Test standard:
EN12266-1



Working pressure and Temperature:
Size DN300 to DN1200,
Working pressure PN10/PN16
Temperature from -10℃ to 120℃ for EPDM gasket
Temperature from -10℃ to 82℃ for NBR gasket

Connection for HDPE pipe
Angular deflection ±4°
suitable for potable water,neutral liquids and sewage
WRAS approved is available upon request

MATERIAL SPECIFICATION

SR.NO.	NAME	MATERIAL
1	End ring	Ductile iron
2	Gripper	Galvanized cast iron
3	Gripper Bolt	Carbon steel
4	Gasket	EPDM
5	Ring Bolt	Carbon steel
6	Body	Ductile iron

Options:Grade 4.8/6.8/8.8
carbon steel bolts with galvanization/dacromet/teflon etc
Stainless steel SS304/SS316/SS316L/A2/A4 etc bolts
FBE coating and Nylon 11 coating is available

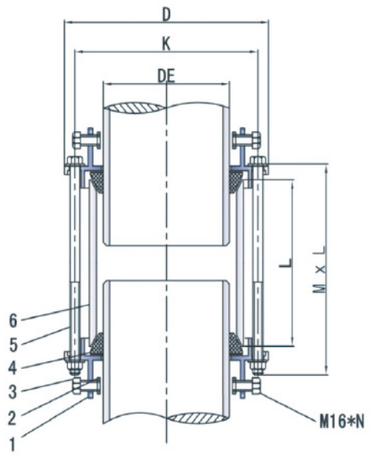

DIMENSIONS(MM)

DE	L	D	MXL	K	M16*N
355	170	510	M16x300x6	473	M16x6
400	180	556	M16x320x8	518	M16x8
500	180	658	M16x320x8	620	M16x8
630	200	790	M16x360x10	750	M16x10
710	200	870	M16x360x12	830	M16x12
800	220	965	M16x400x12	922	M16x12
900	220	1070	M16x400x14	1025	M16x14
1000	220	1172	M16x400x14	1128	M16x14
1200	240	1380	M16x430x16	1330	M16x16

Please note dimension may vary at our discretion

MULTIGRIP RESTRAINED COUPLING

SPECIFICATIONS

Multigrip restrained coupling standard:
comply with EN545

suitable for potable water,neutral liquids and sewage WRAS approved

Connection for pipes in material ductile iron,steel,PVC,PE,Stainless steel,AC etc
Mechanical locking by means of metal inserts in order to avoid pipe's axial movement
Independent clamping on both sides





Working pressure
PN10/16

Maximum temperature
-10℃ to + 70℃

GD8.8,stainless steel bolts nuts and washers various coating

Seal:
NBR etc

Wide tolerance range
Corrosion resistant construction
Total angular deflection of ±4°

MATERIAL SPECIFICATION

SR.NO.	NAME	MATERIAL	MATERIAL STANDARD
1	End ring	Ductile iron ENGJS450-10	EN1563
2	Locking ring	Plastic	
3	Gasket	EPDM,NBR or other rubber material	EN681-1
4	Middle Sleeve	Ductile iron ENGJS450-10	EN1563
5	Gripper	Carbon Steel	EN10025
6	Bolts	Grade 4.8 Carbon steel	ISO 898-1

Options:Grade 4.8/6.8/8.8
carbon steel bolts with galvanization/dacromet/teflon etc
Stainless steel SS304/SS316/SS316L/A2/A4 etc bolts
FBE coating and Nylon 11 coating is available

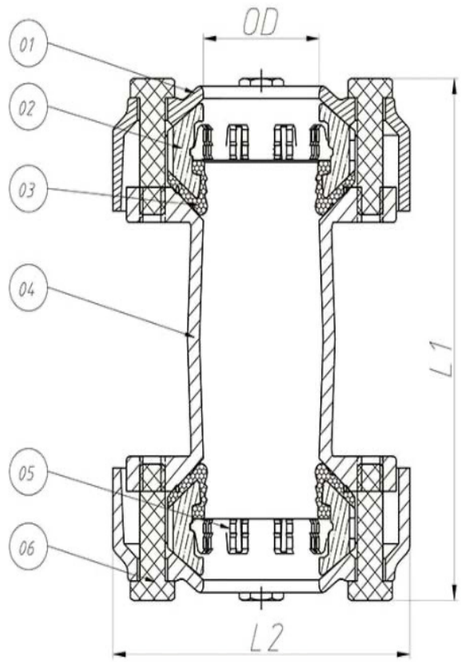

DIMENSIONS(MM)

DN	OD	L1	L2
DN50	46-70	170	187
DN65	70-95	195	212
DN80	88-123	215	240
DN100	108-123	225	260
DN125	133-168	225	285
DN150	159-194	225	311
DN200	200-235	245	370
DN250	250-285	265	420
DN300	315-350	275	485

Please note dimension may vary at our discretion

ООО «ТИ-СИСТЕМС» ИНЖИНИРИНГ И ПОСТАВКА ТЕХНОЛОГИЧЕСКОГО ОБОРУДОВАНИЯ
Интернет: www.tisys.ru www.tisys.kz www.tisys.by www.ти-системс.рф
Телефоны: +7 (495) 777-47-88, (925) 130-87-87, (925) 500-71-55, 54, 65
Эл. почта: info@tisys.ru info@tisys.kz info@tisys.by

MULTIGRIP RESTRAINED FLANGE ADAPTOR

SPECIFICATIONS

Multigrip restrained flange adaptor standard:
comply with EN545

Connection for pipes in material ductile iron,steel,PVC,PE,Stainless steel,AC etc
Mechanical locking by means of metal inserts in order to avoid pipe's axial movement

Working Pressure
PN10/16

Flange drilling hole available for EN1092-2 PN10/16, ASME B16.5 class150 and AS4087

Wide tolerance range
Corrosion resistant construction
Total angular deflection of ±4°



Maximum temperature
-10℃ to + 70℃

suitable for potable water, neutral liquids and sewage
WRAS approved

Coating standard EN30677/EN14901
Test standard EN12266-1

GD8.8,stainless steel bolts nuts and washers various coating

Seal:
NBR etc

MATERIAL SPECIFICATION

SR.NO.	NAME	MATERIAL	MATERIAL STANDARD
1	End ring	Ductile iron ENGJS450-10	EN1563
2	Locking ring	Plastic	
3	Gasket	EPDM,NBR or other rubber material	EN681-1
4	Body	Ductile iron ENGJS450-10	EN1563
5	Gripper	Carbon Steel Q235	EN10025
6	Bolts	Grade 4.8 Carbon steel	ISO 898-1

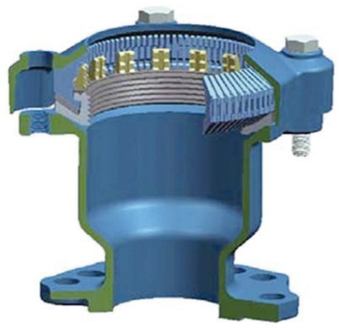

Options:Grade 4.8/6.8/8.8
carbon steel bolts with galvanization/dacromet/teflon etc
Stainless steel SS304/SS316/SS316L/A2/A4 etc bolts
FBE coating and Nylon 11 coating is available

DIMENSIONS(MM)

DN	OD	L1	L2
DN50	46-70	170	187
DN65	70-95	195	212
DN80	88-123	215	240
DN100	108-123	225	260
DN125	133-168	225	285
DN150	159-194	225	311
DN200	200-235	245	370
DN250	250-285	265	420
DN300	315-350	275	485

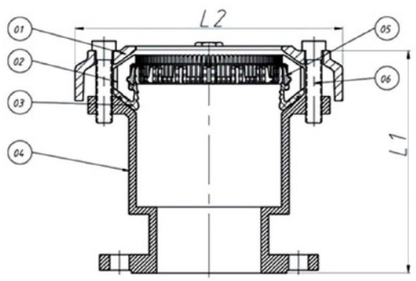

Please note dimension may vary at our discretion

QUICK FLANGE ADAPTOR FOR PVC/HDPE PIPES PN10/PN16

SPECIFICATIONS

Quick flange adaptor standard:
comply with EN545

Coating standard:
EN30677

Test standard:
EN12266-1



Working pressure and Temperature:
Size DN40 to DN400,
Working pressure PN10/PN16
Temperature from -10℃ to 120℃ for EPDM gasket
Temperature from -10℃ to 82℃ for NBR gasket

Connection for PVC and HDPE pipe
suitable for potable water,neutral liquids and sewage
WRAS approved is available upon request

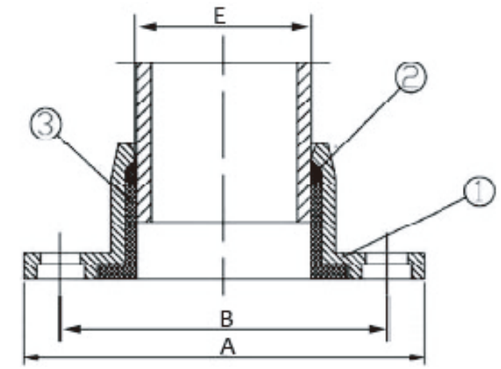

MATERIAL SPECIFICATION

SR.NO.	NAME	MATERIAL
1	Flange body	Ductile iron
2	Ring	Brass
3	Gasket	EPDM

Options:
FBE coating and Nylon 11 coating is available

DIMENSIONS(MM)

SIZE	PIPE OD	A	B	E	WEIGHT (KG)	
					PVC	HDPE
DN40	50	166	118	55	1.74	1.79
DN50/65	63	184	156	68	1.84	1.9
DN60/65	63	184	156	68	1.72	1.78
DN60/DN65	75	185	139	80	1.89	1.96
DN80	75	201	161	80	2.46	2.54
DN80	90	196	151	96	2.46	2.57
DN100	110	220	181	113	3.09	3.24
DN125	125	254	211	131	4.14	4.46
DN125	140	254	212	140	4.32	4.83
DN150	160	283	244	165	5.45	6.07
DN200	200	338	297	206	6.25	7.14
DN200	225	338	299	231	7.18	8.11
DN250	250	402	360	257	9.73	10.93
DN300	315	454	412	321	14.04	15.44
DN400	400	570	529	410	21.8	23.54

Please note dimension may vary at our discretion

ООО «ТИ-СИСТЕМС» ИНЖИНИРИНГ И ПОСТАВКА ТЕХНОЛОГИЧЕСКОГО ОБОРУДОВАНИЯ
Интернет: www.tisys.ru www.tisys.kz www.tisys.by www.ти-системс.рф
Телефоны: +7 (495) 777-47-88, (925) 130-87-87, (925) 500-71-55, 54, 65
Эл. почта: info@tisys.ru info@tisys.kz info@tisys.by

SADDLE FOR PVC/HDPE PIPES PN10/PN16

SPECIFICATIONS

Saddle standard:
comply with EN545

Coating standard:
EN30677

Test standard:
EN12266-1



Working pressure and Temperature:
Size OD50 to OD400,
Working pressure PN10/PN16
Temperature from -10℃ to
120℃ for EPDM gasket
Temperature from -10℃ to
82℃ for NBR gasket

Connection for PVC and HDPE pipe
suitable for potable water,neutral liquids and sewage
WRAS approved is available upon request

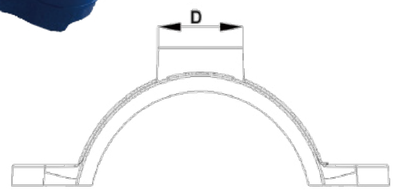

MATERIAL SPECIFICATION

NAME	MATERIAL
Body	Ductile iron
Gasket	EPDM
Bolts	Steel dacromet coated/ss
Washer	Steel dacromet

Surface can be Fusion Bonded Epoxy coating,
nylon 11 coating or upon client request

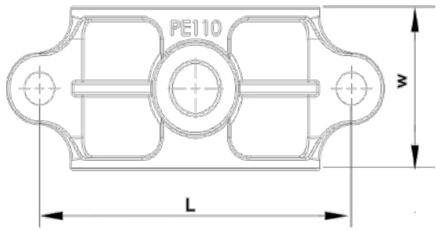

DIMENSIONS(MM)

HDPE PIPE OD	L,MM	W,MM	BOLTS			H,MM
			SIZE X LENGTN	NO.	BOLE HPLE DIMENSION,MM	
DN50	100	60	M12X75	2	15	38.5
DN63	115	60	M12X75	2	15	45
DN75	131	60	M12X75	2	15	51
DN90	147	60	M12X75	2	15	59
DN110	165	80	M12X75	2	15	68
DN125	180	100	M12X75	2	15	77.5
DN140	195	100	M12X75	2	15	85
DN160	215	100	M12X75	2	15	95
DN180	235	100	M12X75	2	15	105
DN200	260	100	M12X75	2	19	115
DN225	285	100	M12X75	2	19	129
DN250	313	100	M12X75	2	19	140
DN280	343	100	M12X75	2	19	155
DN315	380	100	M12X75	2	19	175
DN355	420	100	M12X75	2	19	195

Please note dimension may vary at our discretion

SADDLE FOR PVC/HDPE PIPES-PN10/PN16

SPECIFICATIONS

Saddle standard:
comply with EN545

Coating standard:
EN30677

Test standard:
EN12266-1





Working pressure and Temperature:
Size DN50 to DN300,
Working pressure PN10/PN16
Temperature from -10℃ to
120℃ for EPDM gasket
Temperature from -10℃ to
82℃ for NBR gasket

Connection for PVC and HDPE pipe
suitable for potable water,neutral liquids and sewage
WRAS approved is available upon request

MATERIAL SPECIFICATION

SR.NO.	NAME	MATERIAL
1	Body	Ductile iron
2	Gasket	EPDM
3	Bolts	SS304
4	Washer	SS304

Surface can be Fusion Bonded Epoxy coating,
nylon 11 coating or upon client request

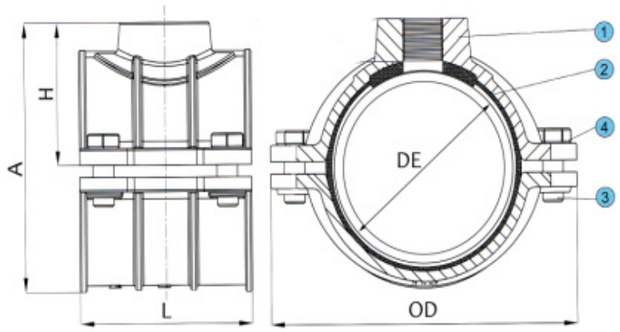

DIMENSIONS(MM)

PVC/PE PIPE OD(DE)	OUTLET THREAD SIZE	A	H	L	OD	BOLT SIZE
50	3/4"-1 1/4"	85	50	81	116.5	M10X35
63	3/4"-2	95	53.5	91.2	132.7	M10X35
75	3/4"-2	110	61.5	102	147	M10X35
90	3/4"-2	127.5	71	100.5	156.5	M10X35
110	3/4"-2	147	82	101.5	178.5	M10X35
125	3/4"-2	166	93.4	111	201	M12X35
140	3/4"-2	173	94	110	216	M12X35
160	3/4"-2	197.5	106	126	236.5	M12X35
200	3/4"-2	244	129	142.5	291	M14X35
250	3/4"-2	296.5	155	145	343	M14X35
315	3/4"-2	319	187	145	408	M14X35

Please note dimension may vary at our discretion

ООО «ТИ-СИСТЕМС» ИНЖИНИРИНГ И ПОСТАВКА ТЕХНОЛОГИЧЕСКОГО ОБОРУДОВАНИЯ
Интернет: www.tisys.ru www.tisys.kz www.tisys.by www.ти-системс.рф
Телефоны: +7 (495) 777-47-88, (925) 130-87-87, (925) 500-71-55, 54, 65
Эл. почта: info@tisys.ru info@tisys.kz info@tisys.by

SADDLE CLAMP FOR PVC PIPE PN10/PN16

SPECIFICATIONS



Saddle clamp for PVC pipe standard:
comply with EN545

Thread type:
BSP/NSPT/Metric thread

Working pressure and Temperature:
size OD32 to OD315,
Working pressure PN16
Temperature from -10℃ to
120℃ for EPDM gasket
Temperature from -10℃ to
82℃ for NBR gasket

MATERIAL SPECIFICATION

SR.NO.	NAME	MATERIAL
1	Body	Cast Iron
2	Gasket	EPDM/NBR
3	Bolt	Gal.steel
4	Washer	Gal.steel
5	Nut	Gal.steel

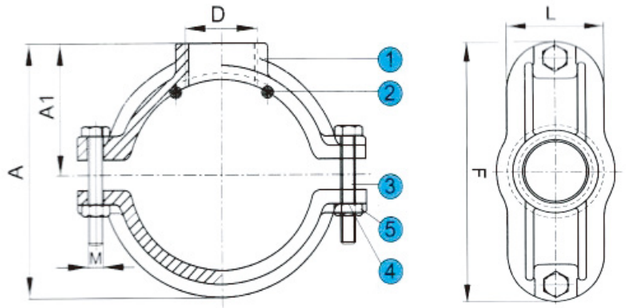

DIMENSIONS(MM)

Pipe OD	F	D	L	A	A1	Bolt Size	Weight (kg)
32	90	1/2"-3/4"	44	57	32	M8x40	0.43
40	95	3/4"	48	65	35	M8x40	0.50
40	95	1"	48	65	42	M8x40	0.62
50	120	3/4"-1"	62	77	42	M10x50	0.94
63	132	3/4"-1"	62	89.5	47.5	M10x50	1.10
75	146	3/4"-1"	62	106	55	M10x50	1.25
75	146	1 1/4"-1 1/2"	68	107	56	M10x50	1.32
90	158	3/4"-1"	62	121	62	M10x50	1.50
90	158	1 1/4"-1 1/2"	68	123	64	M10x70	1.70
110	180	3/4"-1 1/2"	70	151	80	M10x70	2.00
110	196	2"-3"	70	151	80	M10x70	3.00
125	194	3/4"-1 1/2"	70	166	86	M10x70	2.40

Pipe OD	F	D	L	A	A1	Bolt Size	Weight (kg)
125	194	2"-3"	70	168	88	M10x70	3.00
140	215	3/4"-1 1/2"	70	186	98	M10x70	2.70
140	215	2"-3"	70	186	100	M10x70	3.00
160	235	3/4"-1 1/2"	70	194	106	M10x70	3.00
160	235	2"-3"	70	198	110	M10x70	4.00
180	255	1"-1 1/2"	70	223	115	M10x50	3.50
180	255	2"-3"	70	223	115	M10x50	4.00
200	275	3/4"-1 1/2"	70	241	123	M10x70	4.00
200	275	2"-3"	70	243	125	M10x70	5.00
250	340	1"-1 1/2"	70	297	150	M10x50	6.00
250	340	2"-3"	80	297	150	M10x50	7.50
315	415	2"-3"	75	382.5	195	M12x90	10.50

Please note dimension may vary at our discretion

SADDLE FOR PVC AND PE PIPE WITH METRIC THREAD PN10/PN16

SPECIFICATIONS

Saddle standard:
comply with EN545

Coating standard:
EN30677

Test standard:
EN12266-1



Working pressure and Temperature:
Size OD50 to OD315,
Working pressure PN10/PN16
Temperature from -10℃ to
120℃ for EPDM gasket
Temperature from -10℃ to
82℃ for NBR gasket

Connection for PVC and HDPE pipe
suitable for potable water,neutral liquids and sewage
WRAS approved is available upon request

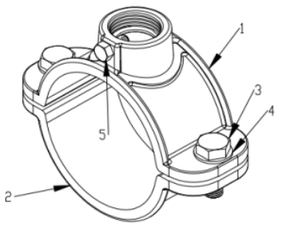

MATERIAL SPECIFICATION

SR.NO.	NAME	MATERIAL	SPECIFICATION
1&2	Body	Ductile iron	EN GJS450-10
3&5	Bolts	Carbon Steel or Stainless Steel	ISO898-1
6	Gasket	EPDM	EN681-1
7	Support	Plastic	

Bolts can be Dacromet coated carbon steel ,stainless steel material or upon client request
Surface can be Fusion Bonded Epoxy coating,nylon 11 coating or upon client request

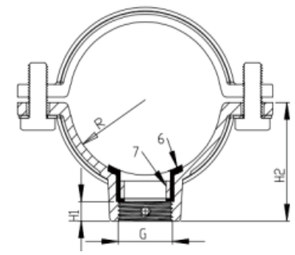

DIMENSIONS(BASED ON PN10 & PN16)

AC PIPE DN	G	H1	H2	R
50	M40	14	55	26
63	M40	14	61.2	32.5
63	M55	19	66.5	32.5
75	M40	14	67.5	38.5
75	M55	19	72.5	38.5
90	M40	14	75	46
90	M55	19	80	46
110	M40	14	85	56
110	M55	19	90	56
125	M40	14	92.5	63.5
125	M55	19	97.5	63.5

AC PIPE DN	G	H1	H2	R
140	M40	14	100	71
140	M55	19	105	71
160	M40	14	110	81
160	M55	19	115	81
200	M40	14	130	101
200	M55	19	135	101
225	M40	14	142	114
225	M55	19	147	114
250	M40	14	154.5	126.5
250	M55	19	159.5	126.5
315	M40	14	187	159
315	M55	19	192	159

Please note dimension may vary at our discretion

ООО «ТИ-СИСТЕМС» ИНЖИНИРИНГ И ПОСТАВКА ТЕХНОЛОГИЧЕСКОГО ОБОРУДОВАНИЯ
Интернет: www.tisys.ru www.tisys.kz www.tisys.by www.ти-системс.рф
Телефоны: +7 (495) 777-47-88, (925) 130-87-87, (925) 500-71-55, 54, 65
Эл. почта: info@tisys.ru info@tisys.kz info@tisys.by

SADDLE FOR AC PIPE WITH METRIC THREAD PN10/PN16

SPECIFICATIONS

Saddle standard:
comply with EN545

Coating standard:
EN30677

Test standard:
EN12266-1



Working pressure and Temperature:
Size DN60 to DN300,
Working pressure PN10/PN16
Temperature from -10℃ to
120℃ for EPDM gasket
Temperature from -10℃ to
82℃ for NBR gasket

Connection for AC pipe
With metric thread M40 and M55 outlet
Suitable for potable water,neutral liquids and sewage
WRAS approved

MATERIAL SPECIFICATION

SR.NO.	NAME	MATERIAL	SPECIFICATION
1&2	Body	Ductile iron	EN GJS450-10
3&5	Bolts	Carbon Steel or Stainless Steel	ISO898-1
4	Washer	Carbon Steel or Stainless Steel	ISO898-1
6	Gasket	EPDM	EN681-1
7	Support	Plastic	

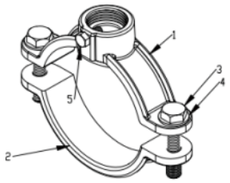

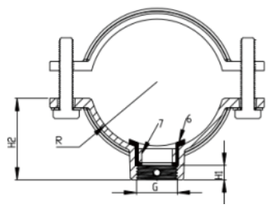

Bolts can be Dacromet coated carbon steel ,stainless steel material or upon client request
Surface can be Fusion Bonded Epoxy coating,nylon 11 coating or upon client request

DIMENSIONS(BASED ON PN10 & PN16)

AC PIPE DN	G	H1	H2	R
DN60	M40	14	56	43
DN60	M55	19	61	43
DN80	M40	14	67	54
DN80	M55	19	72	54
DN100	M40	14	79	66
DN100	M55	19	84	66
DN125	M40	14	92	79
DN125	M55	19	97	79
DN150	M40	14	107	94
DN150	M55	19	112	94
DN200	M40	14	138	125
DN200	M55	19	143	125
DN250	M40	14	164	151
DN250	M55	19	169	154
DN300	M40	14	193.5	180.5
DN300	M55	19	193.5	180.5

Please note dimension may vary at our discretion

TAPPING SADDLES FOR PVC/PE PIPE WITH LOOSE FLANGE PN10/PN16

SPECIFICATIONS

Saddle standard:
comply with EN545

With ajustable flange, flange standard:
EN1092-2

Coating standard:
EN30677



Test standard:
EN12266-1

Working pressure and Temperature:
Size DN100 to DN400,
Working pressure PN10/PN16
Temperature from -10℃ to
120℃ for EPDM gasket
Temperature from -10℃ to
82℃ for NBR gasket

Connection for PVC and HDPE pipe
suitable for potable water,neutral liquids and sewage
WRAS approved is available upon request

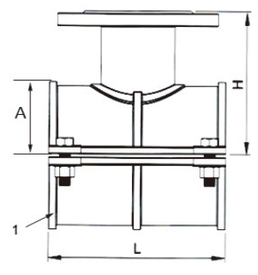

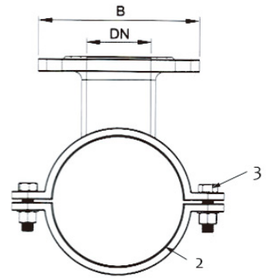

MATERIAL SPECIFICATION

NO.	PARTS NAME	MATERIAL
1	Body	Ductile iron
2	Gasket	EPDM
3	Bolts,nuts and washers	Stainless Steel

Bolts can be Dacromet coated carbon steel ,teflon coated stainless steel material or upon client request
Surface can be Fusion Bonded Epoxy coating,nylon 11 coating or upon client request

DIMENSIONS(MM)

DN	PVC/PE PIPE OD	A	B	H	L	HEIGHT	WEIGHT(KG)
100	110	65.5	200	160	235	225.5	10.7
125	125	73	200	170	235	243	11.2
125	125	73	220	170	235	243	12.3
140	140	81	200	180	235	261	11.9
140	140	81	220	180	235	261	13
150	160	91	200	190	270	281	13.7
150	160	91	220	190	270	281	14.7
200	200	111	200	210	270	321	16.2
200	200	111	220	210	270	321	17.3
250	250	141	200	240	390	381	30.6
250	250	141	220	240	390	381	31.6
300	315	173	200	280	390	453	36.7
300	315	173	220	280	390	453	37.7
400	400	219.5	200	330	390	549.5	53.2
400	400	219.5	220	330	390	549.5	54.2

Please note dimension may vary at our discretion

ООО «ТИ-СИСТЕМС» ИНЖИНИРИНГ И ПОСТАВКА ТЕХНОЛОГИЧЕСКОГО ОБОРУДОВАНИЯ
Интернет: www.tisys.ru www.tisys.kz www.tisys.by www.ти-системс.рф
Телефоны: +7 (495) 777-47-88, (925) 130-87-87, (925) 500-71-55, 54, 65
Эл. почта: info@tisys.ru info@tisys.kz info@tisys.by

UNIVERSAL DCI SADDLE WITH STAINLESS STEEL STRAP, THREAD OUTLET--PN10/PN16

SPECIFICATIONS

Saddle standard:
comply with EN545

Coating standard:
EN30677

Test standard:
EN12266-1

Working pressure and Temperature:
size DN50 to DN400,
working pressure 20bar,test pressure 30bar
Temperature from -10℃ to
120℃ for EPDM gasket
Temperature from -10℃ to
82℃ for NBR gasket



Connection for PVC,HDPE,DI,Steel,GRP etc pipe which pipe OD is in our saddle range
suitable for potable water,neutral liquids and sewage
WRAS approved is available upon request

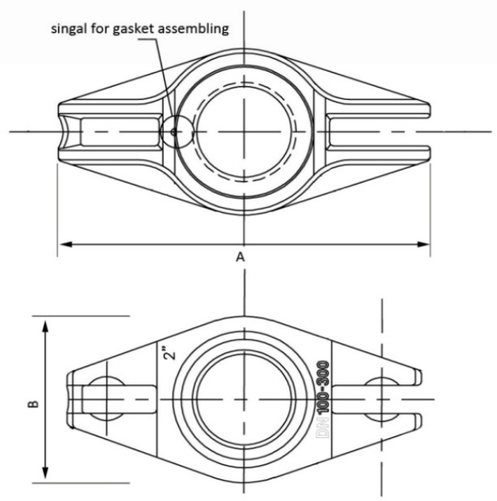

MATERIAL SPECIFICATION

NO.	PARTS NAME	MATERIAL
1	Body	Ductile iron
2	Gasket	EPDM
3	Band	Stainelss steel

Surface can be Fusion Bonded Epoxy coating,
nylon 11 coating or upon client request

DIMENSIONS

SS304 BAND FOR METALLIC PIPE

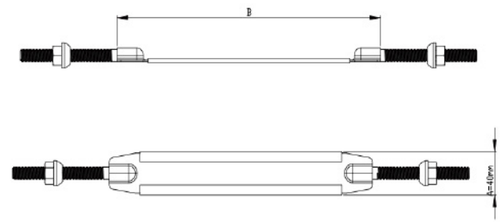

SS304 BAND FOR NONMETALLIC PIPE

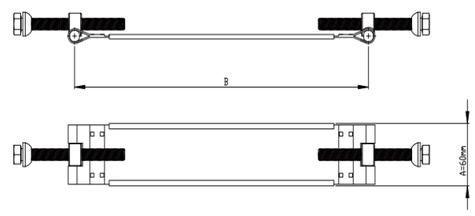

DIMENSIONS

HEAD DN	SCREWED OUTLET	BAND NO.	A	B
50-200	3/4"	1	150	70
50-200	1"	1	150	70
50-200	1 1/4"	1	150	70
50-200	1 1/2"	1	150	70
100-300	1"	1	195	92
100-300	1 1/4"	1	195	92
100-300	1 1/2"	1	195	92
100-300	2"	1	195	92
150-400	2"	2	216	157
150-400	1 1/2"	2	216	157
150-400	3"	2	216	157

DUCTILE IRON HEAD

SIZE	BANDS THICKNESS	BOLTS LENGTH E	BOLTS THREAD LENGTH
54-64	1.5	M12X120	100
60-77	1.5	M12X120	100
77-95	1.5	M12X120	100
98-119	1.5	M12X120	100
102-122	1.5	M12X120	100
120-150	1.5	M12X150	130
125-135	1.5	M12X120	100
139-160	1.5	M12X120	100
150-180	1.5	M12X150	130
151-171	1.5	M12X120	100
160-185	1.5	M12X120	100
170-195	1.5	M12X120	100
173-198	1.5	M12X120	100

SIZE	BANDS THICKNESS	BOLTS LENGTH E	BOLTS THREAD LENGTH
195-220	1.5	M12X120	100
200-230	1.5	M12X150	130
223-248	1.5	M12X120	100
230-250	1.5	M12X120	100
250-280	1.5	M12X150	130
285-315	1.5	M12X150	130
315-340	1.5	M12X120	100
320-345	1.5	M12X120	100
330-355	1.5	M12X120	100
355-380	1.5	M12X120	100
385-400	1.5	M12X120	100
400-425	1.5	M12X120	100
410-435	1.5	M12X120	100

Other range is also available upon request Please note dimension may vary at our discretion

ООО «ТИ-СИСТЕМС» ИНЖИНИРИНГ И ПОСТАВКА ТЕХНОЛОГИЧЕСКОГО ОБОРУДОВАНИЯ
Интернет: www.tisys.ru www.tisys.kz www.tisys.by www.ти-системс.рф
Телефоны: +7 (495) 777-47-88, (925) 130-87-87, (925) 500-71-55, 54, 65
Эл. почта: info@tisys.ru info@tisys.kz info@tisys.by

UNIVERSAL DCI SADDLE WITH STAINLESS STEEL STRAP, FLANGE OUTLET--PN10/PN16

SPECIFICATIONS

Saddle standard:
comply with EN545

flange standard:
EN1092-2

Coating standard:
EN30677



Test standard:
EN12266-1

Working pressure and Temperature:
Size DN50 to 2000
Temperature from -10℃ to 120℃ for EPDM gasket
Temperature from -10℃ to 82℃ for NBR gasket

Connection for PVC, HDPE, DI, Steel, GRP etc pipe which pipe OD is in our saddle range
suitable for potable water,neutral liquids and sewage
WRAS approved is available upon request

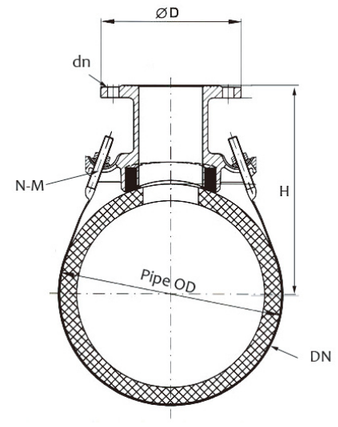

MATERIAL SPECIFICATION

NO.	PARTS NAME	MATERIAL
1	Body	Ductile iron
2	Gasket	EPDM
3	Band	Stainelss steel

Surface can be Fusion Bonded Epoxy coating,nylon 11 coating or upon client request

DIMENSIONS(MM)

DN	OD	DN	ΦD		H	N-M
			PN10	PN16		
50	48-62	50	165	165	140	4-M12
65	57-78	50	165	165	150	4-M12
80	75-98	50	165	165	155	4-M12
80	75-98	65	185	185	155	4-M12
100	108-133	50	165	165	165	4-M12
100	108-133	65	185	185	165	4-M12
100	108-133	80	200	200	170	4-M12
125	122-146	50	165	165	180	4-M12
125	122-146	65	185	185	180	4-M12
125	122-146	80	200	200	185	4-M12
125	122-146	100	220	220	195	4-M12
150	158-177	50	165	165	190	4-M12
150	158-177	65	185	185	190	4-M12
150	158-177	80	200	200	200	4-M12

DN	OD	DN	ΦD		H	N-M
			PN10	PN16		
150	158-177	100	220	220	205	4-M12
200	206-235	80	200	200	225	4-M12
200	206-235	100	220	220	230	4-M12
200	206-235	150	285	285	245	6-M12
250	248-274	80	200	200	265	4-M12
250	248-274	100	220	220	270	4-M12
250	248-274	150	285	285	280	6-M12
250	248-274	200	340	340	290	6-M12
300	313-338	80	200	200	295	4-M16
300	313-338	100	220	220	300	4-M16
300	313-338	150	285	285	310	6-M16
300	313-338	200	340	340	320	6-M16
300	313-338	250	395	405	330	8-M16
500	508-532	100	220	220	405	4-M16

Please note dimension may vary at our discretion

PVC SADDLE CLAMP FOR PVC PIPES PN10/PN16

SPECIFICATIONS

PVC saddle clamp
standard ISO4422-3

Connection for PVC pipe



Suitable for potable water, neutral liquids and sewage

MATERIAL SPECIFICATION

SR.NO.	PARTS NAME	MATERIAL
1	Body	PVC
2	Gasket	EPDM
3	Bolts,nuts and washers	SS304(A2)

Bolts can be Dacromet coated carbon steel,
teflon coated stainless steel material or upon client request

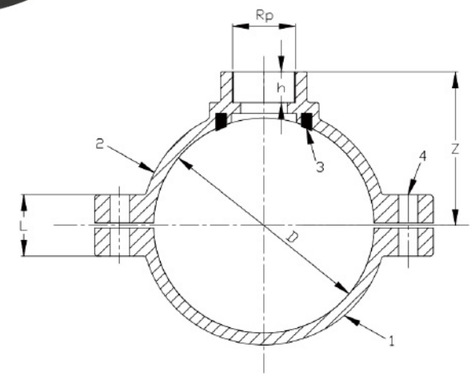

DIMENSIONS(UNIT MM)

PVC ODXRP	H	Z	L
50X25	26	59	23
63X25	26	65	28
63X1"	21	60	28
75X 1 1/2"	24	68	31
90X25	26	80	36
90X1"	24	79.5	36
90X 1 1/2"	24	75	36
110X1/2"	24	88.5	38
110X 1"	24	88.5	38
110X 1 1/2"	35	97	38
110X2"	35	97	38
110X 2 1/2"	35	97	38
125X 1 1/2"	37	105	37
125X2"	37	105	37
125X 2 1/2"	37	105	37
160X1/2"	36	125	55
160X3/4"	36	125	55
160X1"	24	114.5	55

PVC ODXRP	H	Z	L
160 X1 1/2"	36	125	55
160x2"	36	125	55
160 2 1/2"	36	125	55
200 1 1/2"	35	142	74
200X2"	37	142	74
200 X2 1/2"	37	142	74
225x1 1/2"	37	153.5	76
225x2"	37	153.5	76
225X2 1/2"	37	153.5	76
250X2"	28	170	76
250X2 1/2"	38	170	76
250X3"	34	170	76
250X110	61.5	195	76
315X2"	27	170	70
315X110	63	231.5	70
315X160	86	250	70
400X110	61	285	87
400X200	106	330	87
400X250	162	385	87

Big size also available upon request
Please note dimension may vary at our discretion

ООО «ТИ-СИСТЕМС» ИНЖИНИРИНГ И ПОСТАВКА ТЕХНОЛОГИЧЕСКОГО ОБОРУДОВАНИЯ
Интернет: www.tisys.ru www.tisys.kz www.tisys.by www.ти-системс.рф
Телефоны: +7 (495) 777-47-88, (925) 130-87-87, (925) 500-71-55, 54, 65
Эл. почта: info@tisys.ru info@tisys.kz info@tisys.by

HIGH PRESSURE PIPE REPAIR CLAMP

SPECIFICATIONS

Repair clamp standard:
Comply with EN545

Test standard:
EN12266-1



Working pressure and Temperature:
Size 38mm to 1219mm,
working pressure PN64/PN100/PN140
Temperature from -10℃ to
120℃ for EPDM gasket
Temperature from -10℃ to
82℃ for NBR gasket

High pressure pipe repair clamp is designed for the repair of high pressure pipe.
The standard working pressure is 64bar while actual working pressure could reach 100bar or 140bar,
it also can be made according to other special requirements.
All the higher pressure repair clamps are tested under 1.5times than design working pressure.
The standard material of sealing rubber ring is EPDM and NBR, Fluorine rubber and silica gel are also available upon request
Other size and lengths not listed are also available upon request,We can design as per client requirement.

MATERIAL SPECIFICATION

SR.NO.	PARTS NAME	MATERIAL
1	Body	Carbon Steel
2	Gasket	EPDM/NBR
3	Bolts,nuts and washers	Carbon steel or Stainless Steel
4	Plug	Carbon steel or Stainless Steel

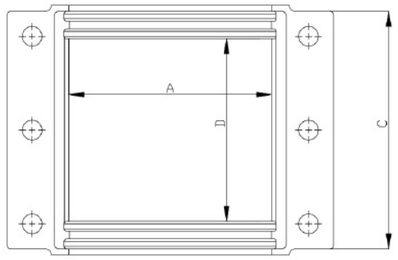

DIMENSIONS(UNIT MM)

PIPE SIZE	A	B	C	WORKING PRESSURE PN BAR
38	73	139	228	140
50	79	146	228	140
63	85	133	215	140
76	101	133	215	140
101	127	133	215	140
152	180	133	228	140
203	231	133	254	140
254	285	139	266	140
304	336	139	266	100
355	368	203	355	100
406	419	203	355	100
457	469	203	355	100

PIPE SIZE	A	B	C	WORKING PRESSURE PN BAR
508	520	203	355	64
558	571	203	355	64
609	622	203	355	64
660	673	203	355	64
711	723	203	355	64
762	774	203	355	64
812	825	203	355	64
863	876	203	355	64
914	927	203	361	64
965	977	203	361	64
1016	1028	203	361	64
1066	1079	203	403	64
1219	1231	203	406	64

Big size also available upon request
Please note dimension may vary at our discretion

WIDE RANGE DUCTILE IRON REPAIR CLAMP -PN10/16

SPECIFICATIONS

Repair clamp standard:
comply with EN545

Test standard:
EN12266-1

Coating standard:
EN30677



Working pressure and Temperature:
Size DN80 to DN300,
working pressure PN10/16
Temperature from -10℃ to
120℃ for EPDM gasket
Temperature from -10℃ to
82℃ for NBR gasket

Connection for PVC , HDPE,DI,Steel,GRP etc pipe which
pipe OD is in our repair clamp range
suitable for potable water,neutral liquids and sewage
WRAS approved is available upon request

MATERIAL SPECIFICATION

NO.	PARTS NAME	MATERIAL
1	Body	Ductile iron
2	Gasket	EPDM
3	Bolts	Gal.carbon steel
4	Nuts	Gal.carbon steel

Surface can be Fusion Bonded Epoxy coating,
nylon 11 coating or upon client request

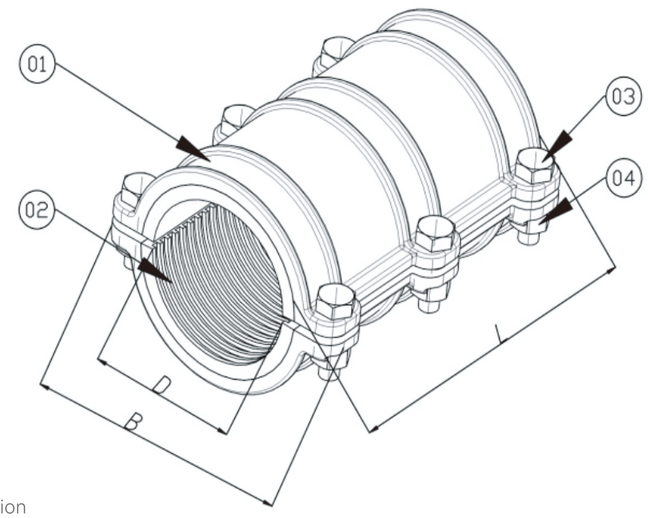

DIMENSIONS

DN	D	L	B
80	88-99	225	219
100	107-119	225	246
150	157-171	225	291
200	219-226	310	352
250	270-276	310	420
300	320-328	310	471

Please note dimension may vary at our discretion

ООО «ТИ-СИСТЕМС» ИНЖИНИРИНГ И ПОСТАВКА ТЕХНОЛОГИЧЕСКОГО ОБОРУДОВАНИЯ
Интернет: www.tisys.ru www.tisys.kz www.tisys.by www.ти-системс.рф
Телефоны: +7 (495) 777-47-88, (925) 130-87-87, (925) 500-71-55, 54, 65
Эл. почта: info@tisys.ru info@tisys.kz info@tisys.by

WIDE RANGE 3PCS DUCTILE IRON REPAIR CLAMP--PN10/PN16

SPECIFICATIONS

Repair clamp standard:
comply with EN545

Test standard:
EN12266-1

Coating standard:
EN30677

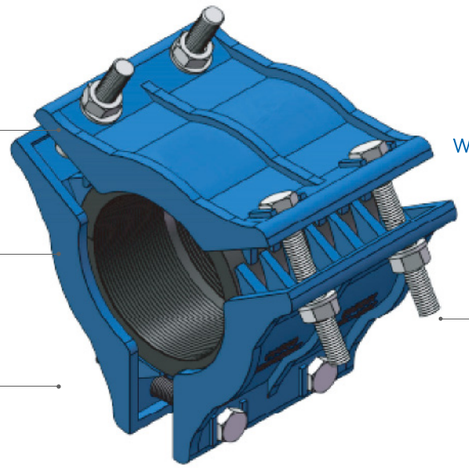

Working pressure and Temperature:
Size DN40 to DN300,
working pressure PN10/16
Temperature from -10℃ to
120℃ for EPDM gasket
Temperature from -10℃ to
82℃ for NBR gasket

Connection for PVC , HDPE,DI,Steel,GRP etc pipe which pipe OD is in our repair clamp range
suitable for potable water,neutral liquids and sewage
WRAS approved is available upon request

MATERIAL SPECIFICATION

NO.	PARTS NAME	MATERIAL
1	Body	Ductile iron
2	Gasket	EPDM
3	Bolt	Gal.grade 8.8 carbon steel
4	Nut	Gal.grade 8.8 carbon steel
5	Washer	Gal.grade 8.8 carbon steel

Surface can be Fusion Bonded Epoxy coating,
nylon 11 coating or upon client request

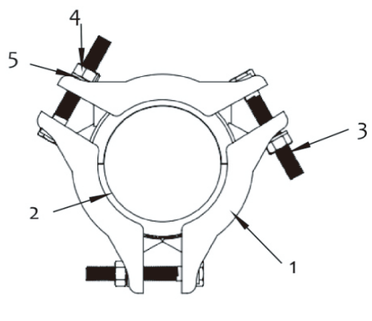

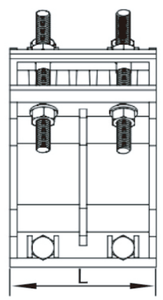

DIMENSIONS

DN	RANGE	L	BOLTS SIZE	BOLTS NO.	WEIGHT(KG)
40	53-58	120	M12x80	6	3.43
60	58-75	150	M12x80	6	5.39
80	84-109	150	M14X110	6	8.34
100	108-125	150	M16X120	6	9.22
125	136-159	200	M16X120	6	15.28
150	159-184	210	M16X120	6	16.72
200	211-238	210	M16X120	6	23.4
250	251-283	210	M20X130	6	27.78
300	310-340	210	M20X130	6	35.08

Please note dimension may vary at our discretion

ADJUSTABLE BELL JOINT REPAIR CLAMP--PN10

SPECIFICATIONS

Repair clamp standard:
comply with EN545

Coating standard:
EN30677

Test standard:
EN12266-1



Flange standard:
EN1092-2

Working pressure and Temperature:
Size DN50 to DN600,
working pressure PN10
Temperature from -10℃ to
120℃ for EPDM gasket
Temperature from -10℃ to
82℃ for NBR gasket

Connection or repair of leaking sockets and
spigot joints on cast iron/ductile iron pipes
Also can be used for the repairing of leakages on joints of pipes of other material
(A/C,fiber glass,steel,plastic)
suitable for potable water,neutral liquids and sewage
WRAS approved is available upon request

MATERIAL SPECIFICATION

NO.	PARTS NAME	MATERIAL
1	Nut	Gal.carbon steel
2	Bolts	Gal.carbon steel
3	Spigot ring	Ductile iron
4	Gasket	EPDM
5	Bell ring	Ductile iron

Surface can be Fusion Bonded Epoxy coating,
nylon 11 coating or upon client request

DIMENSIONS(MM)

DN	RANGE DMIN-MAX(MM)
50	62-68
65	75-84
80	94-100
100	114-120
150	166-173
200	217-224
250	270-276
300	321-328
350	373-380
400	424-431
500	527-534
600	630-638

Please note dimension may vary at our discretion

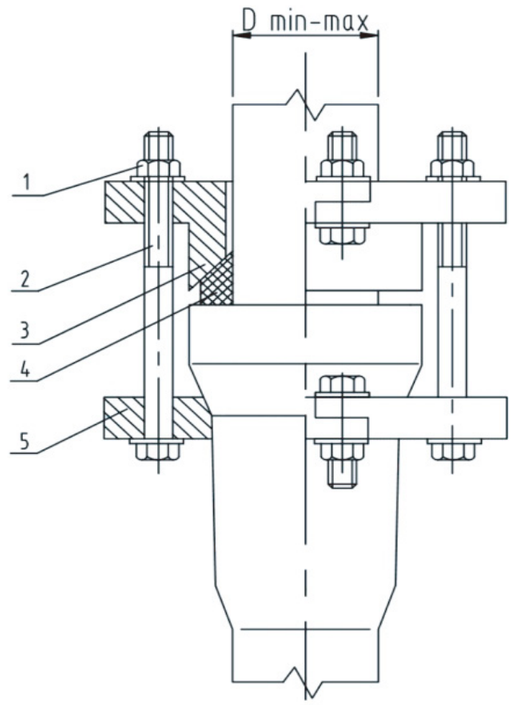

ООО «ТИ-СИСТЕМС» ИНЖИНИРИНГ И ПОСТАВКА ТЕХНОЛОГИЧЕСКОГО ОБОРУДОВАНИЯ
Интернет: www.tisys.ru www.tisys.kz www.tisys.by www.ти-системс.рф
Телефоны: +7 (495) 777-47-88, (925) 130-87-87, (925) 500-71-55, 54, 65
Эл. почта: info@tisys.ru info@tisys.kz info@tisys.by

FULL STAINLESS STEEL REPAIR CLAMP-PN10/16

SPECIFICATIONS

Repair clamp standard:
comply with EN545

Test standard:
EN12266-1



Working pressure and Temperature
Size DN50 to DN2000,
working pressure PN16/PN10/PN6/PN4
Temperature from -10℃ to
120℃ for EPDM gasket
Temperature from -10℃ to
82℃ for NBR gasket

Suitable for potable water,neutral liquids and sewage
WRAS approved is available upon request

MATERIAL SPECIFICATION

SR.NO.	NAME	MATERIAL
1	Bolt	Stainless Steel
2	Nut	Stainless Steel
3	Washer	Stainless Steel
4	Locking Plate	Stainless Steel
5	Lugs	Stainless Steel
6	Junction Plate	Stainless Steel
7	Band	Stainless Steel
8	Sealing rubber	EPDM

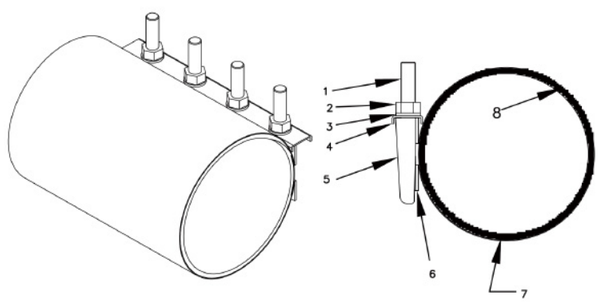

DIMENSIONS

SIZE	OD RANGE	LENGTH	BOLTS	WORKING PRESSURE
DN50	60-67	150/200	M16x180	PN10/16
DN80	88-98	150/200/300	M16x180	PN10/16
DN80	95-105	150/200/300	M16x180	PN10/16
DN100	108-118	150/200/300	M16x180	PN10
DN100	115-128	150/200/300	M16x180	PN10
DN150	158-172	200/300	M16x180	PN10
DN150	168-182	200/300	M16x180	PN10
DN200	217-229	200/300	M16x180	PN10
DN200	225-240	200/300	M16x180	PN10
DN250	243-260	200/300/450	M16x180	PN6/10
DN250	270-288	200/300/450	M16x180	PN6/10
DN300	313-336	200/300/450	M16x180	PN6/10
DN300	340-360	200/300/450	M16x180	PN6/10

We suggest you use double bands for big size(which is bigger than DN250) or more
Other range and length is available upon request
Please note dimension may vary at our discretion

STAINLESS STEEL REPAIR CLAMP WITH DCI JAW-PN10/16

SPECIFICATIONS

Repair clamp standard:
comply with EN545

Test standard:
EN12266-1



Working pressure and Temperature
Size DN50 to DN2000,
working pressure PN16/PN10/PN6/PN4
Temperature from -10℃ to
120℃ for EPDM gasket
Temperature from -10℃ to
82℃ for NBR gasket

suitable for potable water,neutral liquids and sewage
WRAS approved is available upon request

MATERIAL SPECIFICATION

SR.NO.	NAME	MATERIAL
1	Lugs	Ductile iron
2	SS band	SS304
3	Gasket	EPDM
4	Bolts and Nuts	CS or SS

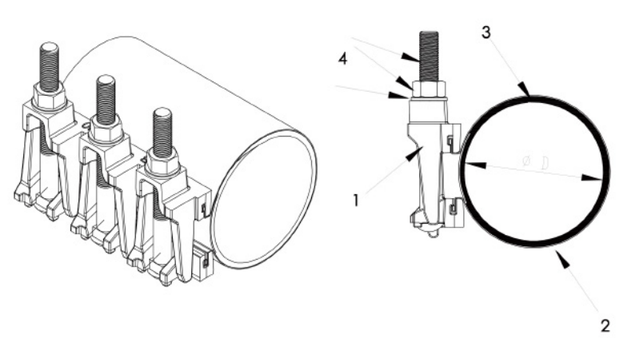

DIMENSIONS

SIZE	OD RANGE	LENGTH	BOLTS	WORKING PRESSURE
DN50	60-67	150/200	M16x180	PN10/16
DN80	88-98	150/200/300	M16x180	PN10/16
DN80	95-105	150/200/300	M16x180	PN10/16
DN100	108-118	150/200/300	M16x180	PN10
DN100	115-128	150/200/300	M16x180	PN10
DN150	158-172	200/300	M16x180	PN10
DN150	168-182	200/300	M16x180	PN10
DN200	217-229	200/300	M16x180	PN10
DN200	225-240	200/300	M16x180	PN10
DN250	243-260	200/300/450	M16x180	PN6/10
DN250	270-288	200/300/450	M16x180	PN6/10
DN300	313-336	200/300/450	M16x180	PN6/10
DN300	340-360	200/300/450	M16x180	PN6/10

We suggest you use double bands for big size(which is bigger than DN250) or more
Other range and length is available upon request
Please note dimension may vary at our discretion

ООО «ТИ-СИСТЕМС» ИНЖИНИРИНГ И ПОСТАВКА ТЕХНОЛОГИЧЕСКОГО ОБОРУДОВАНИЯ
Интернет: www.tisys.ru www.tisys.kz www.tisys.by www.ти-системс.рф
Телефоны: +7 (495) 777-47-88, (925) 130-87-87, (925) 500-71-55, 54, 65
Эл. почта: info@tisys.ru info@tisys.kz info@tisys.by

MIN TYPE REPAIR CLAMP

SPECIFICATIONS

Standard:
comply with EN545

Test standard:
EN12266-1

Temperature from -10℃ to
120℃ for EPDM gasket
Temperature from -10℃ to
82℃ for NBR gasket
Suitable for potable water,
neutral liquids and sewage WRAS approved

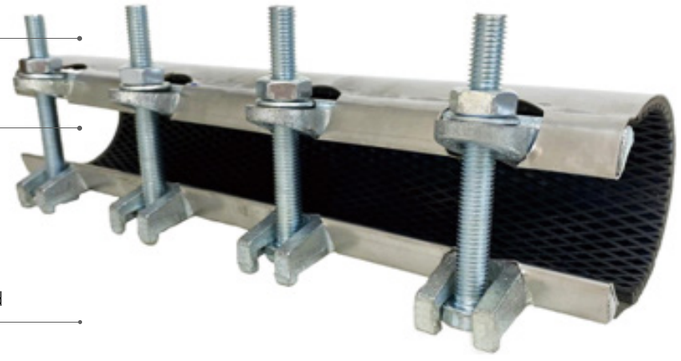

mini type repair clamp is for small leakage
it can repair pipe under pressure or without pressure
it can repair thin and thick wall pipes, because it is mini type,
so the assembling force is small, it is friendly for thin wall pipes.
making installation simple and significantly reducing costs
it is acceptable for axial displacement and angular slope
lip-like structure of the rubber ring enhances
the sealing when the pressure increases.

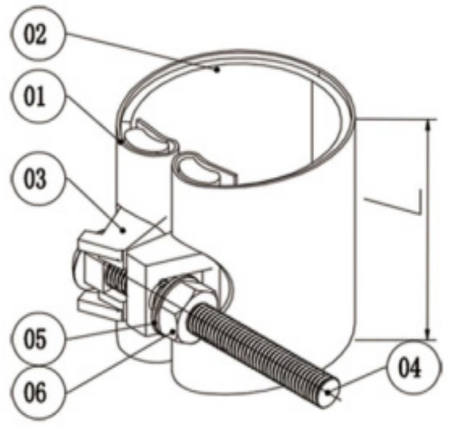

MATERIAL SPECIFICATION

SR.NO.	NAME	MATERIAL
1	Band	SS304
2	Gasket	NBR/EPDM
3	Lug	Gal.ductile iron
4	Bolts	Carbon steel Grade 8.8
5	Washer	Gal.steel
6	Nut	Gal.steel grade 8.8

DIMENSIONS

SIZE(INCH)	RANGE	WORKING PRESSURE BAR	BOLTS SIZE	GASKET THICKNESS	BAND THICKNESS
1/2"	19-23	16bar	M10X90	3.5	0.5
3/4"	24-28	16bar	M10X90	3.5	0.5
1"	29-34	16bar	M10X90	3.5	0.5
1 1/4"	38-42	16bar	M10X90	3.5	0.5
1 12/"	44-48	16bar	M10X90	3.5	0.5
2"	55-61	16bar	M10X90	3.5	0.5
2 1/2"	69-73/71-76/76-82	16bar	M10X90	3.5	0.5
3"	82-87/87-93/94-100/99-104	16bar	M10X90	3.5	0.5
4"	105-111/112-118/120-126	16bar	M10X90	3.5	0.5
5"	126-131/132-138/140-146	16bar	M10X90	3.5	0.5

Other range and length is available upon request. Please note dimension may vary at our discretion

FULL STAINLESS STEEL REPAIR CLAMP-PN10/16

SPECIFICATIONS

Repair clamp standard:
comply with EN545

Test standard:
EN12266-1



Working pressure and Temperature
Size DN50 to DN2000,
working pressure PN16/PN10/PN6/PN4
Temperature from -10℃ to
120℃ for EPDM gasket
Temperature from -10℃ to
82℃ for NBR gasket

Suitable for potable water,neutral liquids and sewage
WRAS approved is available upon request

MATERIAL SPECIFICATION

SR.NO.	NAME	MATERIAL
1	Insertion	Stainless Steel 304
2	Spigot	Gal.carbon steel
3	Washer	Gal.carbon steel
4	Nut	Gal.carbon steel
5	Brad	Gal.carbon steel
6	Gasket	NBR
7	Band	Stainless Steel 304
8	Pipe	Gal.carbon steel

Bolting NUM L=200-2PC L=300 3PC

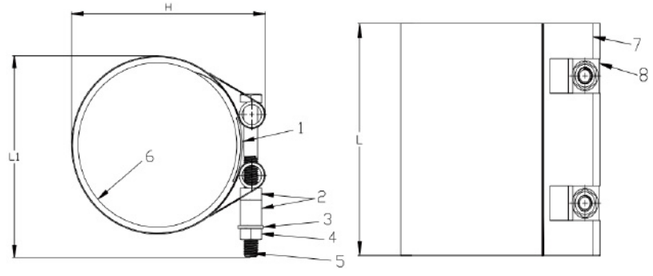

DIMENSIONS

SIZE DN	LENGTH	RANGE	BAND MIN. THICKNESS	INSERTION MIN.THICKNESS	BAND NO.
DN50	200	60-65	0.7	0.9	Single Band
DN65	200	75-85	0.7	0.9	Single Band
DN80	200	88-98	0.7	0.9	Single Band
DN100	200	108-118	0.7	0.9	Single Band
DN125	200	140-145	0.7	0.9	Single Band
DN150	200	165-175	0.7	0.9	Single Band
DN200	200	218-228	0.7	0.9	Single Band
DN250	200	270-280	0.7	0.9	Single Band
DN300	200	320-330	0.7	0.9	Single Band
DN50	300	60-65	0.7	0.9	Single Band
DN65	300	75-85	0.7	0.9	Single Band
DN80	300	88-98	0.7	0.9	Single Band
DN100	300	108-118	0.7	0.9	Single Band

SIZE DN	LENGTH	RANGE	BAND MIN. THICKNESS	INSERTION MIN.THICKNESS	BAND NO.
DN125	300	140-145	0.7	0.9	Single Band
DN150	300	165-175	0.7	0.9	Single Band
DN200	300	218-228	0.7	0.9	Single Band
DN250	300	270-280	0.7	0.9	Single Band
DN300	300	320-330	0.7	0.9	Single Band
DN50	250	60-64	0.7	0.9	Double Bands
DN65	250	75-78	0.7	0.9	Double Bands
DN80	250	88-94	0.7	0.9	Double Bands
DN100	250	107-115	0.7	0.9	Double Bands
DN125	250	132-140	0.7	0.9	Double Bands
DN150	250	158-162	0.7	0.9	Double Bands
DN200	250	218-226	0.7	0.9	Double Bands
DN250	250	273-289	0.7	0.9	Double Bands
DN300	250	320-330	0.7	0.9	Double Bands

Other range and length is available upon request
Please note dimension may vary at our discretion

ООО «ТИ-СИСТЕМС» ИНЖИНИРИНГ И ПОСТАВКА ТЕХНОЛОГИЧЕСКОГО ОБОРУДОВАНИЯ
Интернет: www.tisys.ru www.tisys.kz www.tisys.by www.ти-системс.рф
Телефоны: +7 (495) 777-47-88, (925) 130-87-87, (925) 500-71-55, 54, 65
Эл. почта: info@tisys.ru info@tisys.kz info@tisys.by

STUDDED REDUCER FLANGE –PN10/16

SPECIFICATIONS

Studded reducer flange standard:
comply with EN545

Coating standard:
EN30677

Test standard:
EN12266-1



Flange standard:
EN1092-2

Working pressure and Temperature:
size DN40 to DN300,
Working pressure PN10/16

Suitable for potable water,neutral liquids and sewage
WRAS approved is available upon request

MATERIAL SPECIFICATION

SR.NO.	PARTS NAME	MATERIAL
1	Body	Ductile iron
2	Bolt and nut	Gal. carbon steel

Surface can be Fusion Bonded Epoxy coating,
nylon 11 coating or upon client request

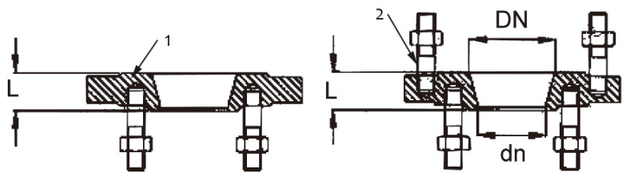

DIMENSIONS

DN	DN	L	SCREWED	WEIGHT(KG)
60	40	55	D M16(x8)	5.8
80	40	32	D M16(X8)	4.9
80	40	32	D M16(X12)	5.7
80	50	32	D M16(X8)	5.1
80	50	32	D M16(X12)	5.7
80	60	50	D M16(X8)	7.8
80	60	32	D M16(X12)	5.7
80	65	32	D M16(X12)	5.7
100	40	32	D M16(X12)	6.1
100	60	32	D M16(X12)	6
100	65	32	D M16(X12)	6.1
100	80	55	D M16(X12)	9.6
100	80	55	D M16(X12)	9.9
125	60	32	D M16(X12)	7.7
125	65	32	D M16(X12)	7.7
125	80	32	D M16(X12)	8.2
125	80	32	D M16(X16)	8
125	100	55	D M16(X16)	12.4

DN	DN	L	SCREWED	WEIGHT(KG)
150	60	37	S M16(X4)	10.2
150	65	37	S M16(X4)	10.2
150	80	32	S M16(X4)	8.1
150	80	32	S M16(X8)	8.7
150	100	32	D M16(X8)M20	10.2
150	125	55	D M16(X8)M20	15.3
200 PN10/16	60	55	S M16(X4)	20.5
200 PN10/16	65	55	S M16(X4)	20.5
200 PN10/16	80	50	S M16(X4)	13.8
200 PN10/16	80	50	S M16(X8)	19
200 PN10/16	100	50	S M16(X8)	13.4
200 PN10/16	125	38	S M16(X8)	14.5
200 PN10	150	32	D M20(X16)	14.3
200 PN16	150	32	D M20(X20)	14.7
250 PN10	100	35	S M20(X8)	17
250 PN10	200	35	D M20(X20)	18.3
300 PN10	200	35	S M20(X8)	20
300PN10	250	35	D M20(X20)	21.8

Please note dimension may vary at our discretion

RUBBER EXPANSION JOINT–PN10

SPECIFICATIONS

Rubber expansion joint standard:
comply with EN545

Flange standard:
EN1092-1

Test standard:
EN12266-1



Working pressure and Temperature:
Size DN32 to DN600,
working pressure PN10
suitable for potable water,
neutral liquids and sewage

MATERIAL SPECIFICATION

SR.NO.	NAME	MATERIAL
1	Rubber	EPDM/NBR/Neoprene
2	Carcass	Nylon Cord Fabric
3	Reinforcing Wire	Spring Steel Wire
4	Flange	Carbon Steel

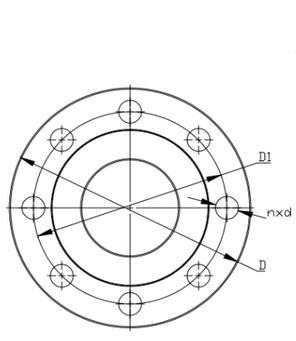

DIMENSIONS

SIZE	DN	N X D	E (+/-1)	L	D1	D
1 1/4"	32	4x18	16	95	100	140 ± 0,5
1 1/2"	40	4x18	16	95	110	150 ± 0,5
2"	50	4x18	16	105	125	165 ± 0,5
2 1/2"	65	4x18	16	115	145	185 ± 0,5
3"	80	8x18	18	130	160	200 ± 0,5
4"	100	8x18	18	135	180	220 ± 0,5
5"	125	8x18	20	170	210	250 ± 0,5
6"	150	8x22	20	180	240	285 ± 0,5
8"	200	8x22	22	205	295	340 ± 0,5
10"	250	12x22	24	240	350	395 ± 0,5
12"	300	12x22	24	260	400	445 ± 0,5
14"	350	16x22	26	265	460	505 ± 0,5
16"	400	16x26	28	265	515	565 ± 0,5
18"	450	20x26	28	265	565	615 ± 0,5
20"	500	20x26	30	265	620	670 ± 0,5
24"	600	20x30	32	265	725	780 ± 0,5

Please note dimension may vary at our discretion

ООО «ТИ-СИСТЕМС» ИНЖИНИРИНГ И ПОСТАВКА ТЕХНОЛОГИЧЕСКОГО ОБОРУДОВАНИЯ
Интернет: www.tisys.ru www.tisys.kz www.tisys.by www.ти-системс.рф
Телефоны: +7 (495) 777-47-88, (925) 130-87-87, (925) 500-71-55, 54, 65
Эл. почта: info@tisys.ru info@tisys.kz info@tisys.by

RUBBER EXPANSION JOINT-PN16

SPECIFICATIONS

Rubber expansion joint standard:
comply with EN545

Flange standard:
EN1092-1

Test standard:
EN12266-1



Working pressure and Temperature:
Size DN32 to DN600,
working pressure PN16
suitable for potable water,
neutral liquids and sewage

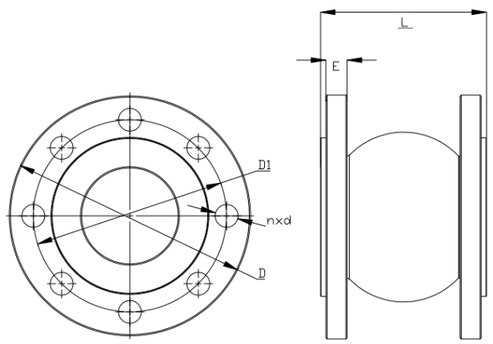

MATERIAL SPECIFICATION

SR.NO.	NAME	MATERIAL
1	Rubber	EPDM/NBR/Neoprene
2	Carcass	Nylon Cord Fabric
3	Reinforcing Wire	Spring Steel Wire
4	Flange	Carbon Steel

DIMENSIONS

SIZE	DN	N X D	E (+/-1)	L	D1	D
1 1/4"	32	4x18	16	95	100	140 ± 0,5
1 1/2"	40	4x18	16	95	110	150 ± 0,5
2"	50	4x18	16	105	125	165 ± 0,5
2 1/2"	65	4x18	16	115	145	185 ± 0,5
3"	80	8x18	18	130	160	200 ± 0,5
4"	100	8x18	18	135	180	220 ± 0,5
5"	125	8x18	20	170	210	250 ± 0,5
6"	150	12x22	20	180	240	285 ± 0,5
8"	200	12x26	22	205	295	340 ± 0,5
10"	250	12x26	24	240	350	405 ± 0,5
12"	300	12x26	24	260	410	460 ± 0,5
14"	350	16x26	26	265	470	520 ± 0,5
16"	400	16x30	28	265	525	580 ± 0,5
18"	450	20x30	28	265	585	640 ± 0,5
20"	500	20x33	30	265	650	715 ± 0,5
24"	600	20x36	32	265	770	840 ± 0,5

Please note dimension may vary at our discretion

COUPLING FOR HIGH PRESSURE STEEL PIPE -WORKING PRESSURE 330PSI

SPECIFICATIONS

Coupling standard:
comply with EN545

Coating standard:
EN30677



Test standard:
EN12266-1

Working pressure and Temperature:
Size 2.375" to 6.625",
working pressure 330PSI
Temperature from -10°C to
120°C for EPDM gasket
Temperature from -10°C to
82°C for NBR gasket

Connection for steel pipe
suitable for potable water,neutral liquids and sewage
WRAS approved is available upon request

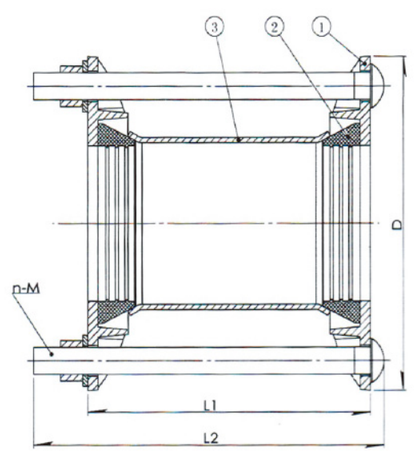

MATERIAL SPECIFICATION

SR.NO.	NAME	MATERIAL
1	Gland	Ductile iron
2	Gasket	NBR/EPDM
3	Sleeve	Steel

Options:Grade 4.8/6.8/8.8
carbon steel bolts with galvanization/dacromet/teflon etc
Stainless steel SS304/SS316/SS316L/A2/A4 etc bolts
FBE coating and Nylon 11 coating is available

DIMENSIONS

SIZE	PIPE OD	OD	LENGTH	N-M
2"	2.375"	60.3	5"	3x5/8"
2"	2.375"	60.3	7"	3x5/8"
2"	2.375"	60.3	12"	3x5/8"
2"	2.375"	60.3	14"	3x5/8"
3"	3.5"	88.9	5"	4x5/8"
3"	3.5"	88.9	7"	4x5/8"
3"	3.5"	88.9	12"	4x5/8"
3"	3.5"	88.9	27"	4x5/8"

SIZE	PIPE OD	OD	LENGTH	N-M
4"	4.5"	114.3	5"	4x5/8"
4"	4.5"	114.3	7"	4x5/8"
4"	4.5"	114.3	12"	4x5/8"
4"	4.5"	114.3	24"	4x5/8"
6"	6.625"	168.3	5"	6x5/8"
6"	6.625"	168.3	7"	6x5/8"
6"	6.625"	168.3	12"	6x5/8"
6"	6.625"	168.3	16"	6x5/8"
6"	6.625"	168.3	24"	6x5/8"

Please note dimension may vary at our discretion

PRODUCTION

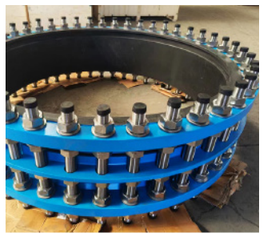




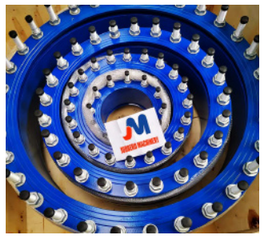







INSPECT








ООО «ТИ-СИСТЕМС» ИНЖИНИРИНГ И ПОСТАВКА ТЕХНОЛОГИЧЕСКОГО ОБОРУДОВАНИЯ
Интернет: www.tisys.ru www.tisys.kz www.tisys.by www.ти-системс.рф
Телефоны: +7 (495) 777-47-88, (925) 130-87-87, (925) 500-71-55, 54, 65
Эл. почта: info@tisys.ru info@tisys.kz info@tisys.by